# STEEL WORLD

STEEL WORLD

www.steelworldtoys.com

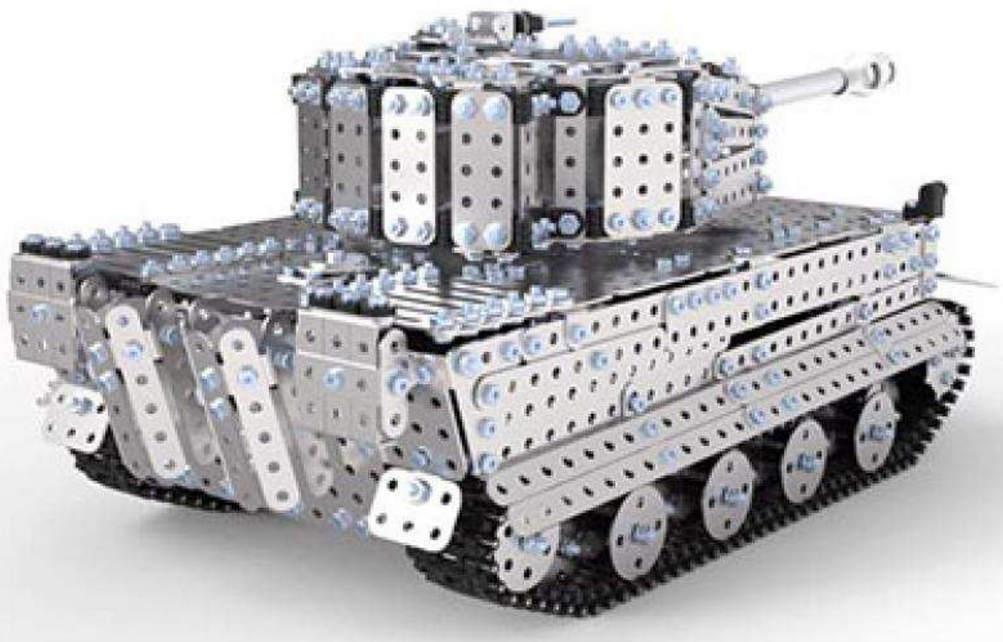

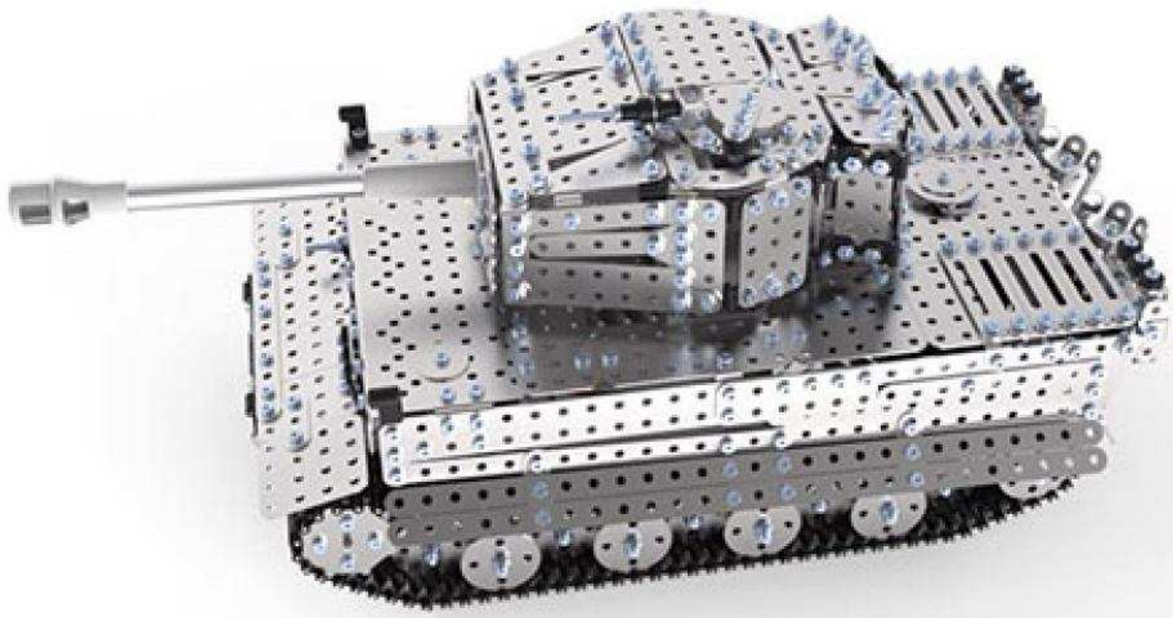

REMOTE CONTROL SERIES
STEEL ART
SW
STEEL WORLD
Gold Collection
1100+PCS
REMOTE CONTROL ROBOT
ALLOY MATERIAL
MACHINERY
CRASH AND FALL
AGES 8+

BARLEY BREAKER

HARVESTER

# JURASSIC WORLD

## Dinosaur

SW STEEL WORLD®

**STAINLESS STEEL**

UNIQUE SHAPE,
COUNTERFEIT WILL BE SUED

ECO-FRIENDLY MATERIAL,
MEET EUROPEAN STANDARDS

**159pcs**

# STEEL WORLD

SW STEEL WORLD®

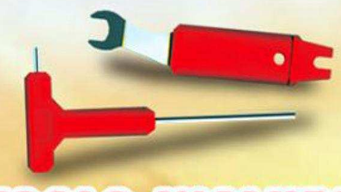

TOOLS INCLUDED

NEW ITEMS
WILL BE LAUNCHED
EVERY MONTH

www.steelworldtoys.com

# STEEL WORLD

NEW ITEMS
WILL BE LAUNCHED
EVERY MONTH

STEEL WORLD ®

TOOLS INCLUDED

www.steelworldtoys.com

SW
STEEL WORLD
DIY METAL TOYS
Let's Play Together!
GO!!!
www.steelworldtoys.com

STEEL WORLD
STEEL WORLD
TOOLS INCLUDED
NEW ITEMS
WILL BE LAUNCHED
EVERY MONTH
www.steelworldtoys.com

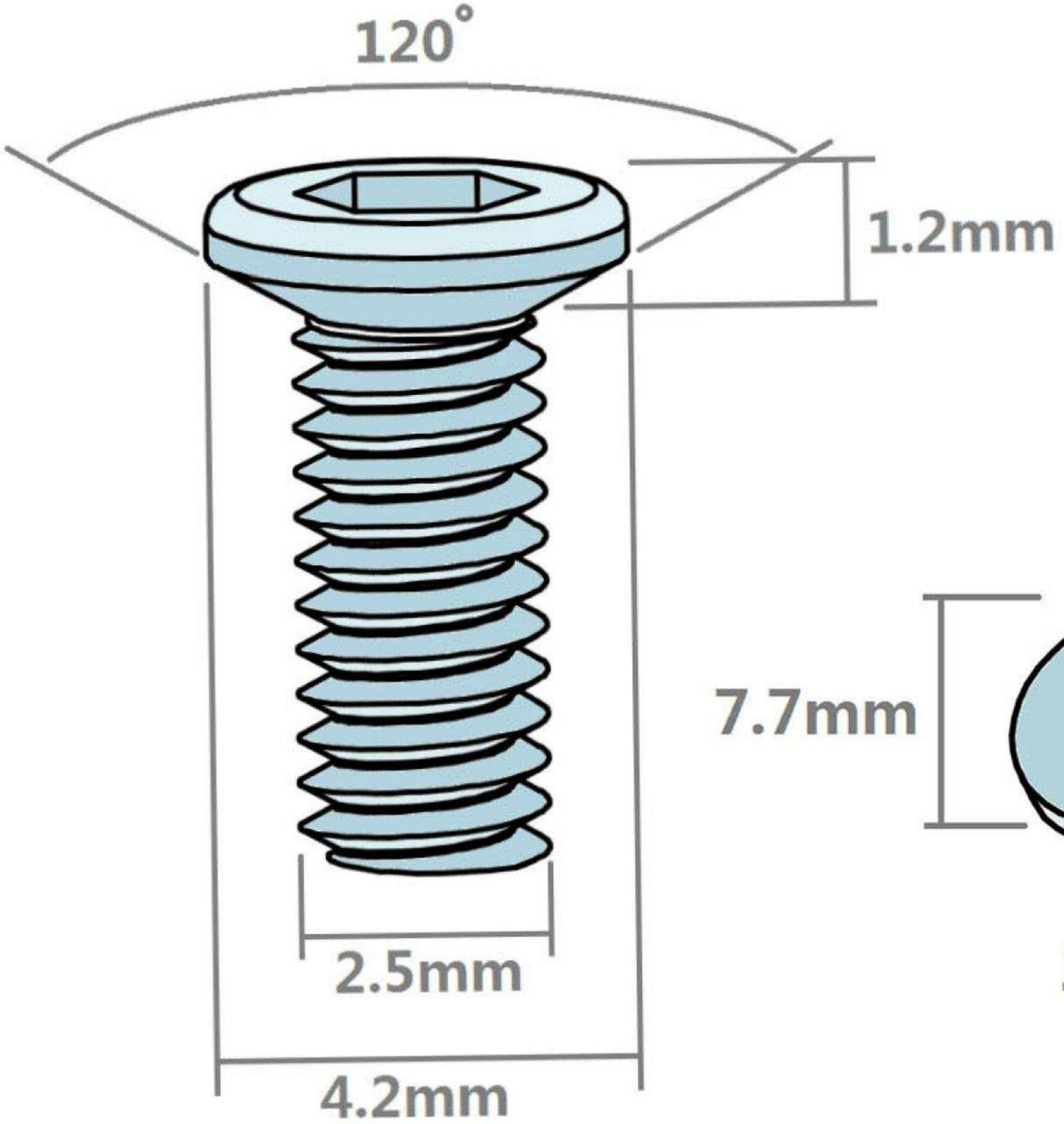
120°
1.2mm
2.5mm
4.2mm

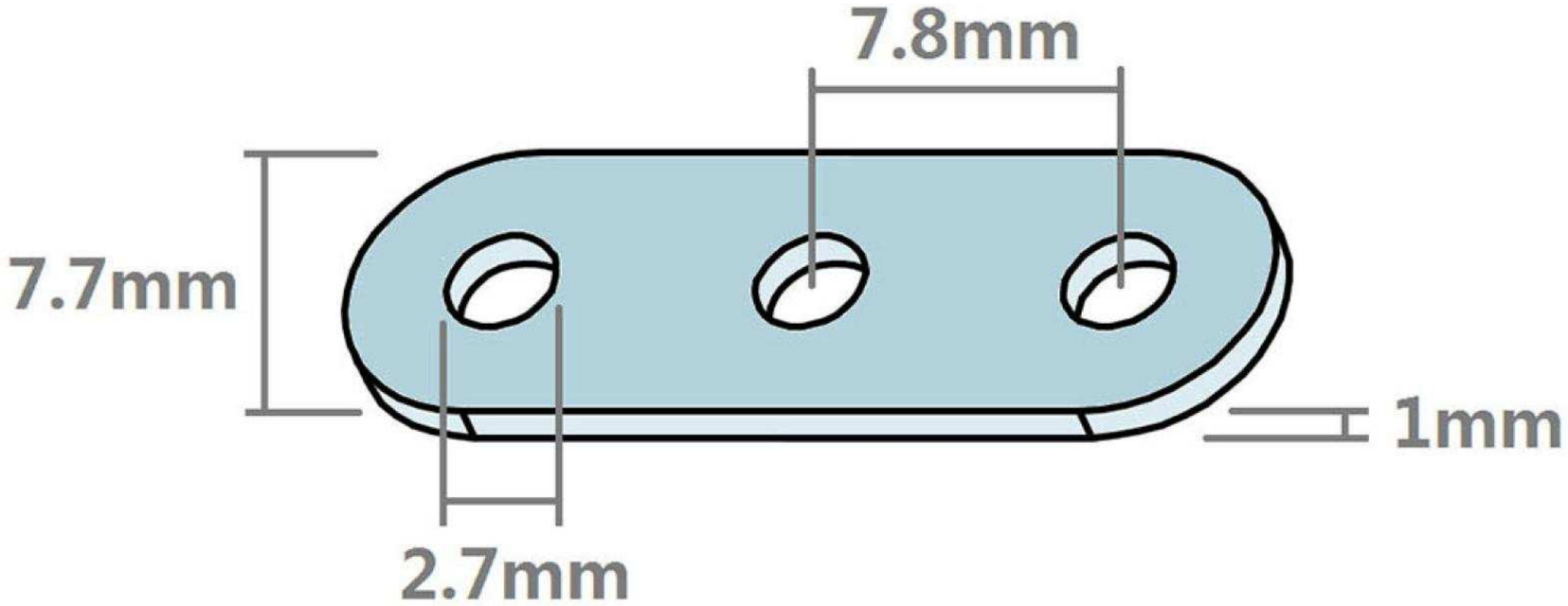
7.8mm
7.7mm
1mm
2.7mm

# TABLE LAMP

## Micro Steel World

Item NO.:SW(ES)-030

SW STEEL WORLD®

ImaGine CREATOR

2 IN 1 MODELS

METAL ASSEMBLY

TOUCH & HOLD THE BUTTON TO START, CLICK THE BUTTON TO SWITCH THE PATTERN.

OFFER A REMOTE CONTROLLER AS GIFT, WHICH CAN GET START OR SWITC.

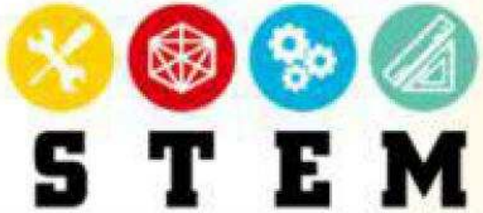

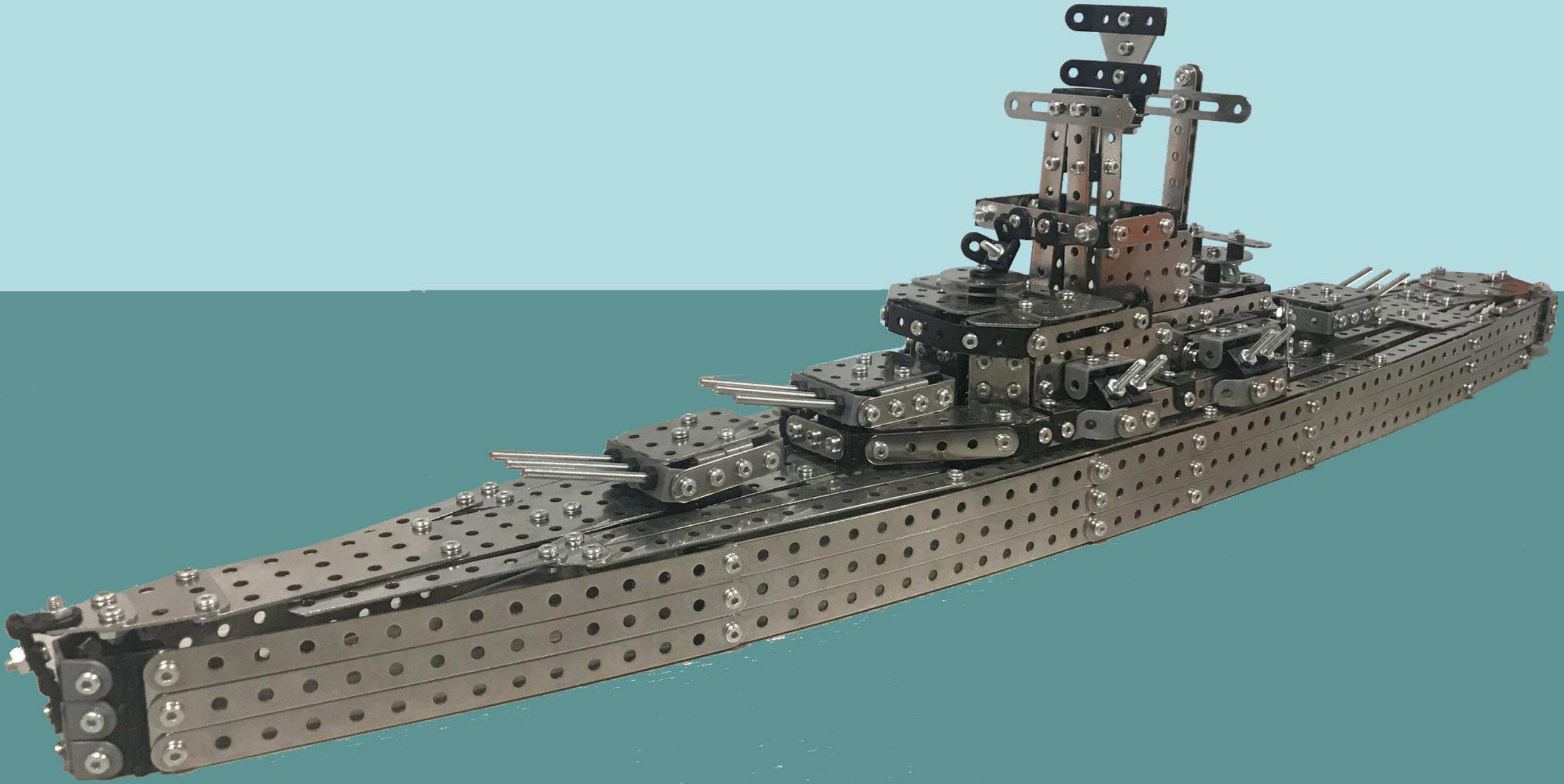

# STEEL WORLD MIRCO

STAINLESS STEEL CONSTRUCTION SYSTEM

STEEL WORLD®

**SW-075**

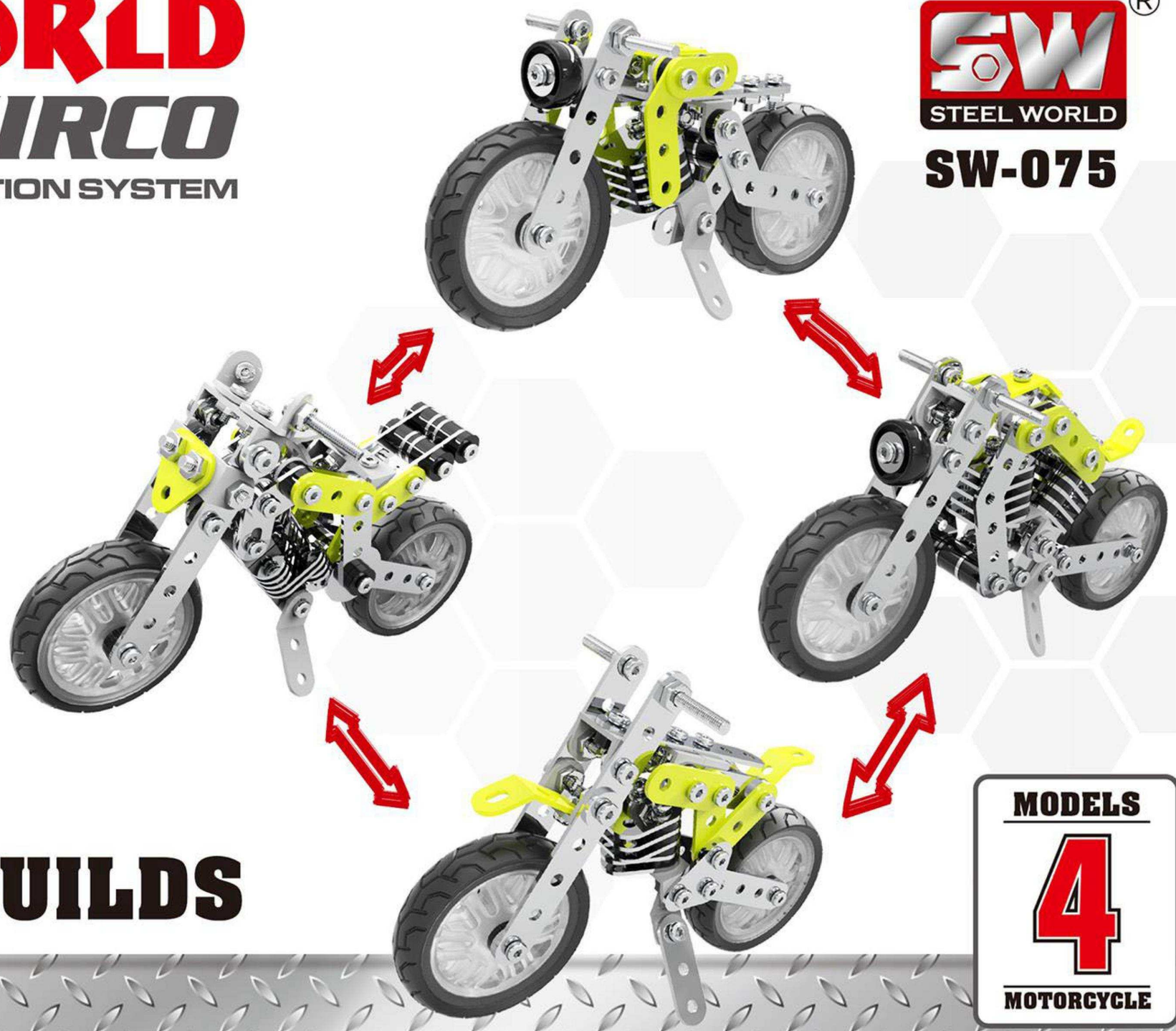

## MANY MORE BUILDS

**MODELS**

**4**

**MOTORCYCLE**

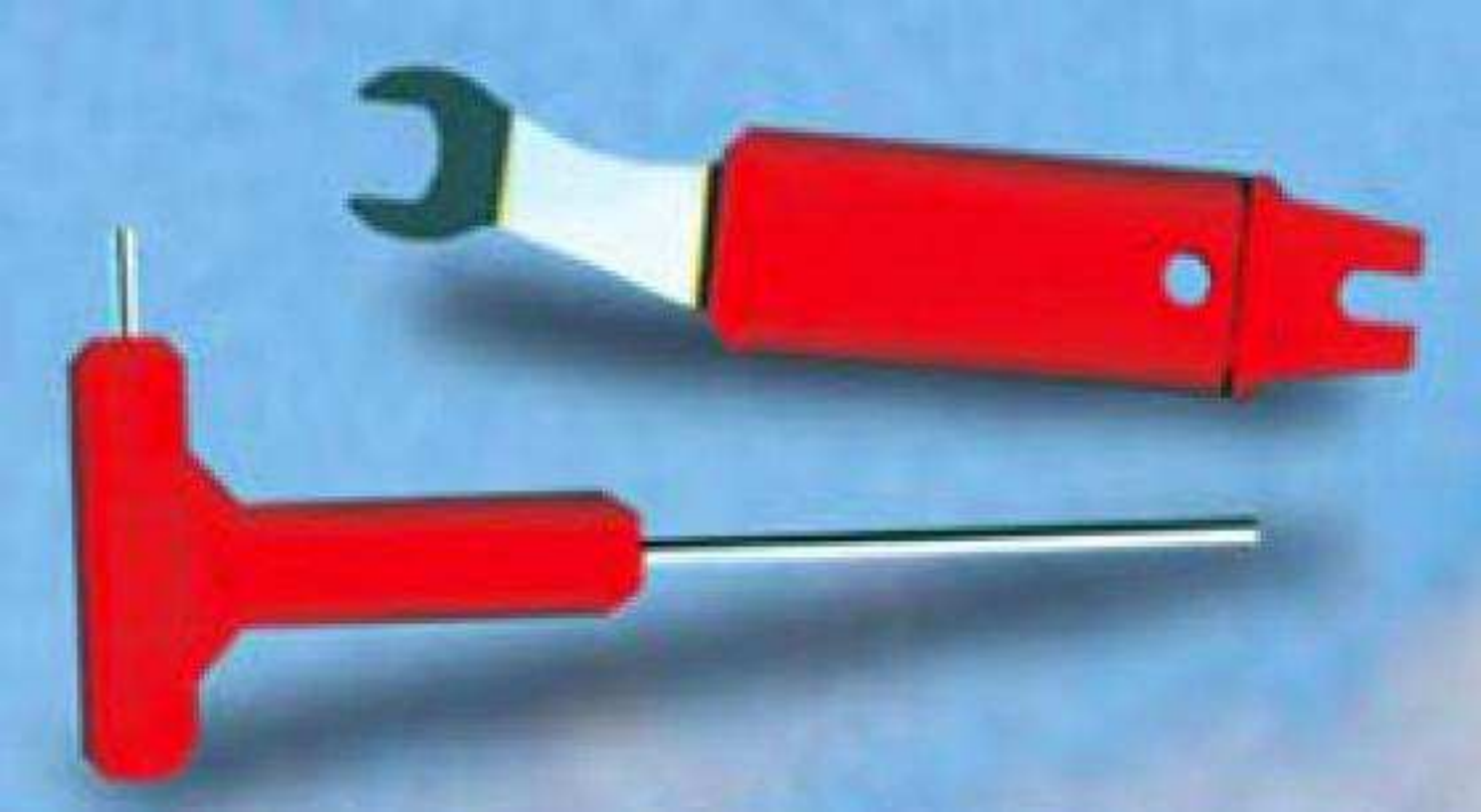

STEEL WORLD®

MICRO
STEEL WORLD
2400+ PCS
REMOTE CONTROL EXCAVATOR
AGES 8+
MICRO
STEEL WORLD
2400+ PCS
REMOTE CONTROL EXCAVATOR
STAINLESS STEEL CONSTRUCTION SYSTEM
• ASSEMBLING
• MECHANICAL
• MODELING
• METAL
MAGICAL
CREATIVE
INTELLIGENT
EQUIPPED WITH A POWER TOOLS

STEEL WORLD®

MICRO
STEEL WORLD
1145 PCS
REMOTE CONTROL ROBOT
AGES 8+
MICRO
STEEL WORLD
1145 PCS
REMOTE CONTROL ROBOT
STAINLESS STEEL CONSTRUCTION SYSTEM
• ASSEMBLING
• MECHANICAL
• MODELING
• METAL
MAGICAL
CREATIVE
INTELLIGENT

STEEL WORLD
MICRO STEEL WORLD
STAINLESS STEEL CONSTRUCTION SYSTEM

STEEL WORLD®

MICRO
STEEL WORLD
1450 PCS
REMOTE CONTROL FORKLIFT
AGES 6+
MICRO
STEEL WORLD
1450 PCS
REMOTE CONTROL FORKLIFT
STAINLESS STEEL CONSTRUCTION SYSTEM
• ASSEMBLING
• MECHANICAL
• MODELING
• METAL
MAGICAL
CREATIVE
INTELLIGENT

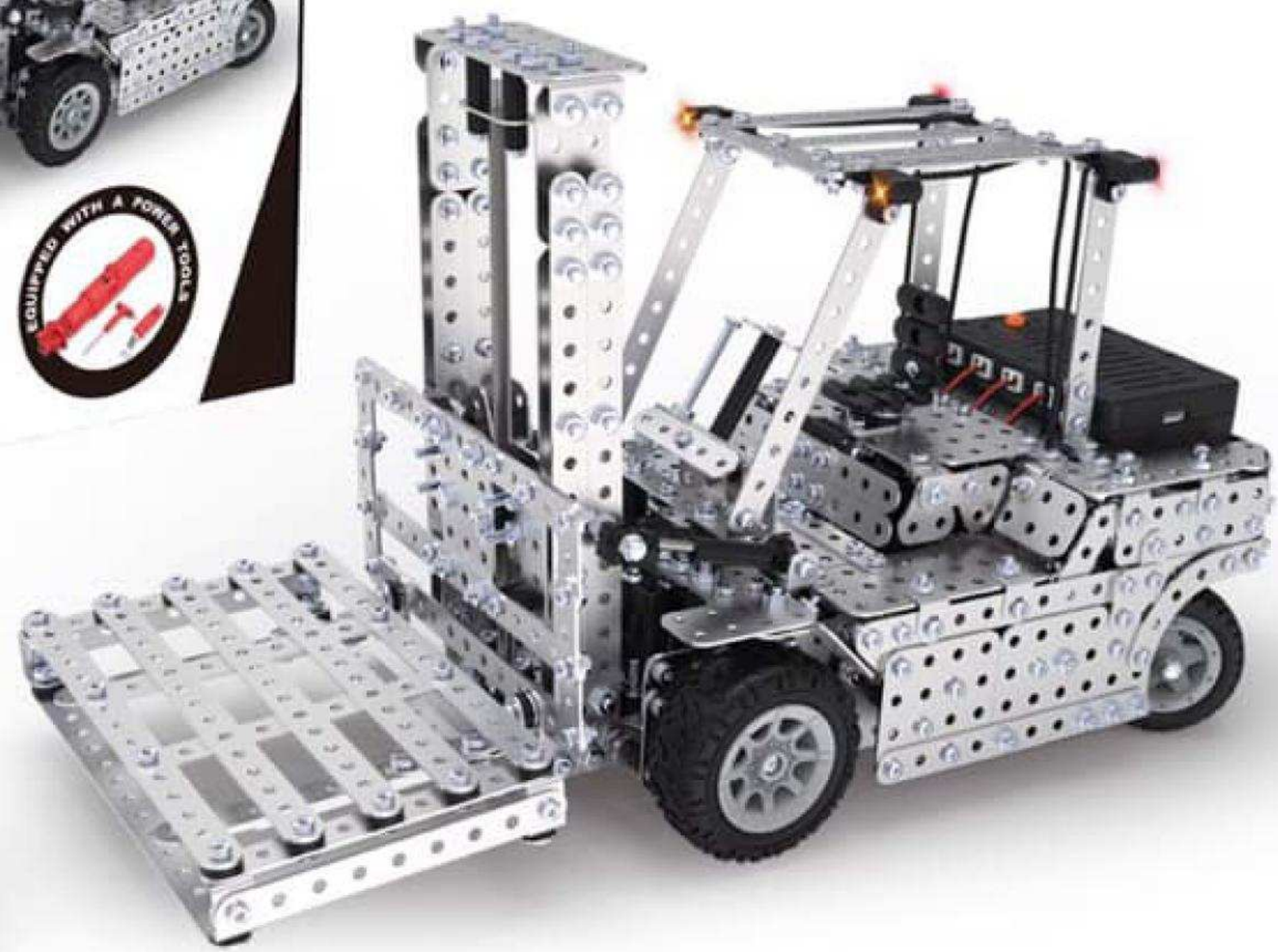

# STEEL WORLD MIRCO

STAINLESS STEEL CONSTRUCTION SYSTEM

STEEL WORLD

**SW-076**

## MANY MORE BUILDS

**MODELS**

**4**

**ENGINEERING**

# STEEL WORLD

## MIRCO

STAINLESS STEEL CONSTRUCTION SYSTEM

STEEL WORLD

**SW-082**

# MANY MORE BUILDS

MODELS

3

MILITARY

# STEEL WORLD MIRCO

STAINLESS STEEL CONSTRUCTION SYSTEM

STEEL WORLD

**SW-077**

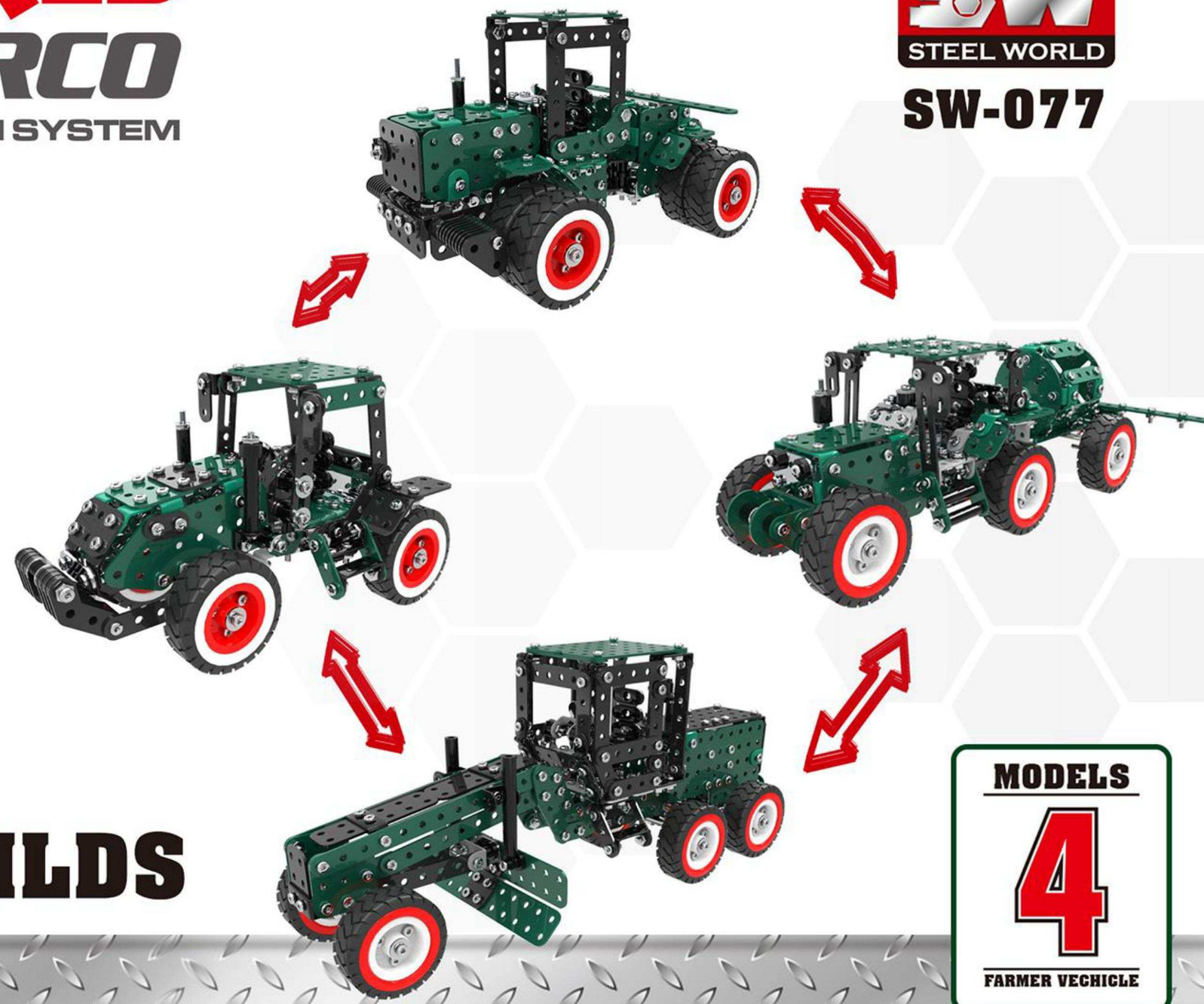

## MANY MORE BUILDS

**MODELS**

**4**

**FARMER VECHICLE**

# STEEL WORLD MIRCO

STAINLESS STEEL CONSTRUCTION SYSTEM

STEEL WORLD

**SW-079**

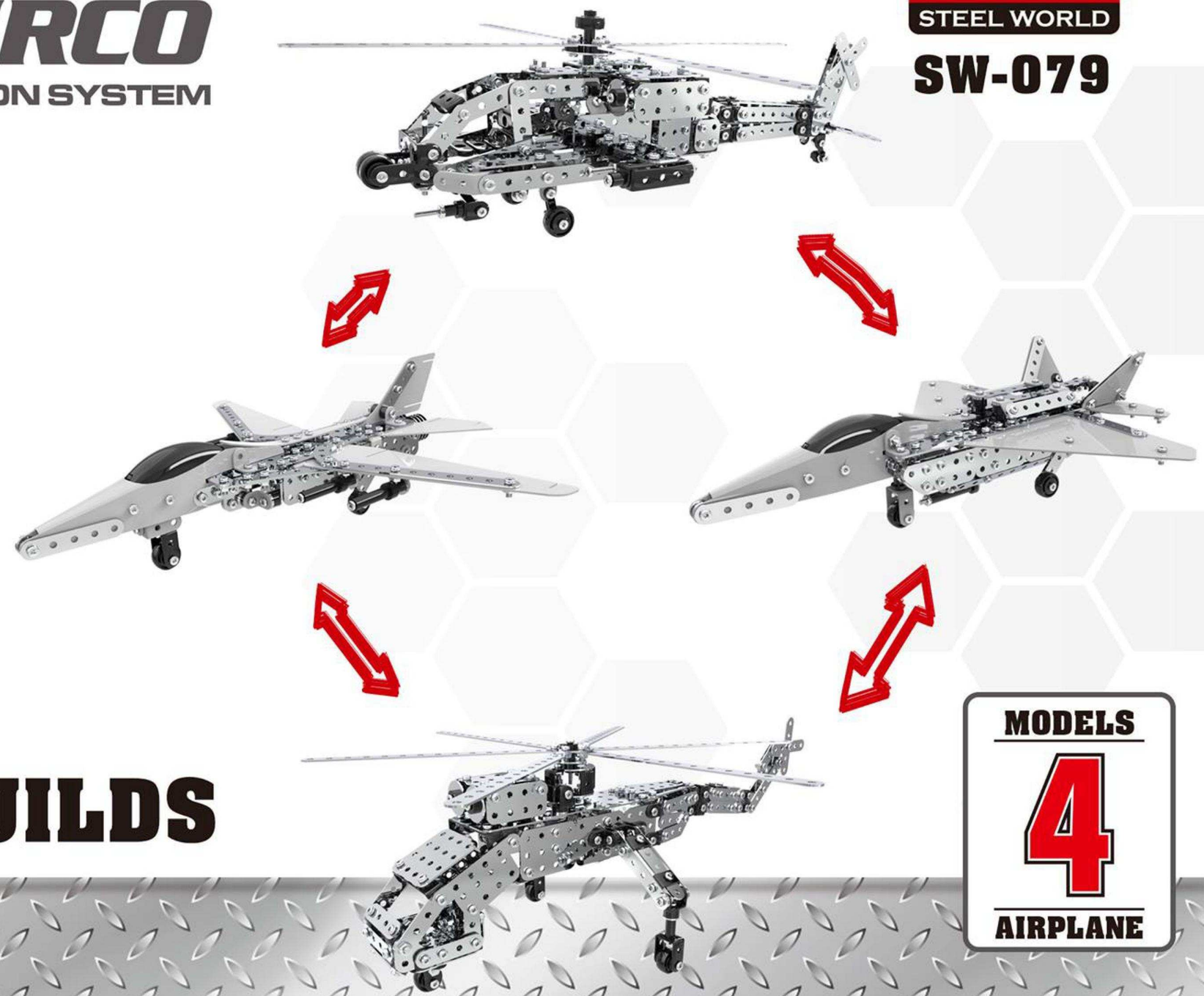

# MANY MORE BUILDS

**MODELS**

**4**

**AIRPLANE**