LEGO Technic

8094

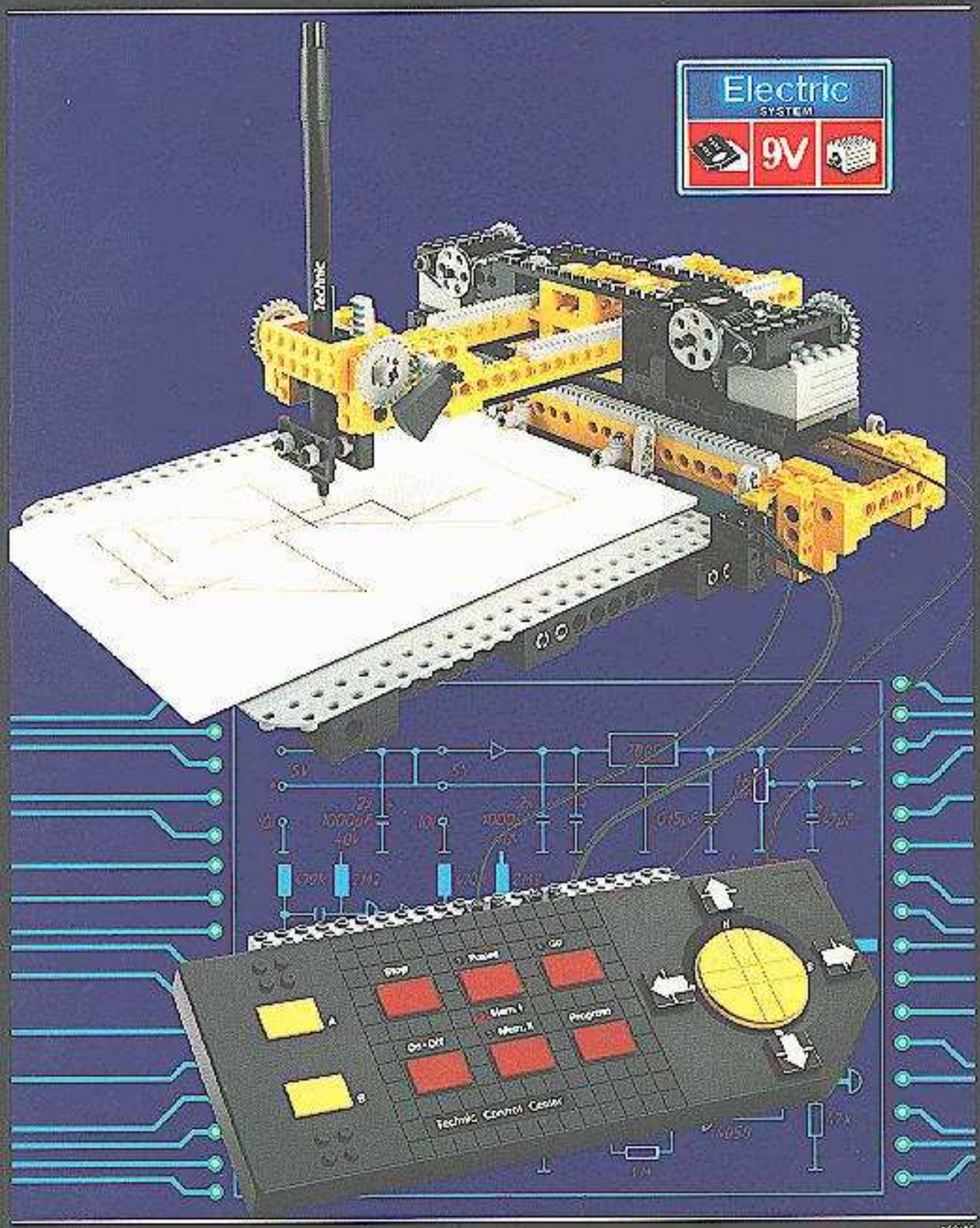

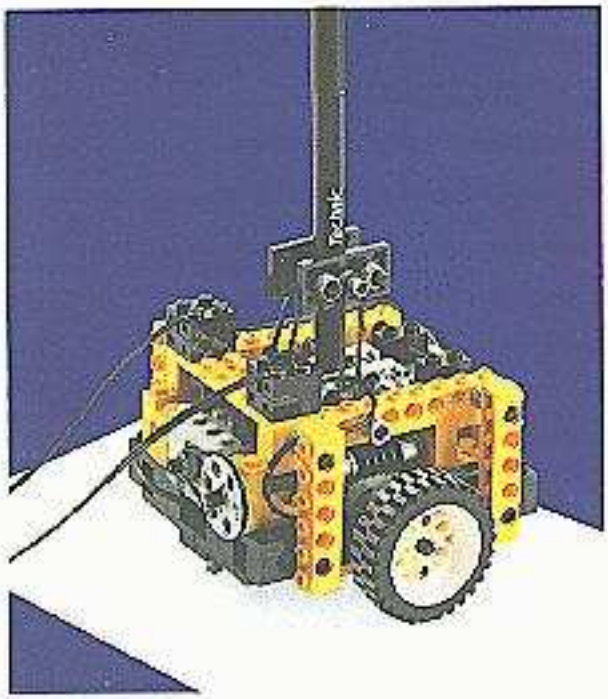

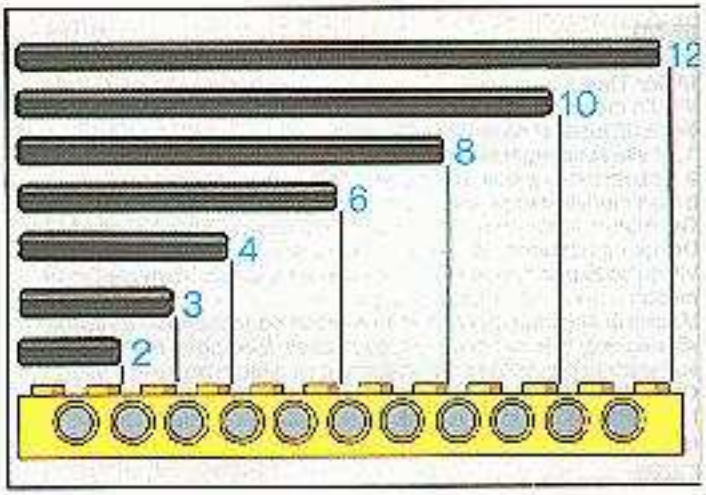

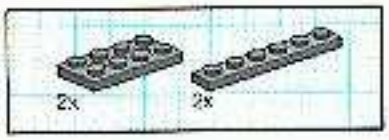

1

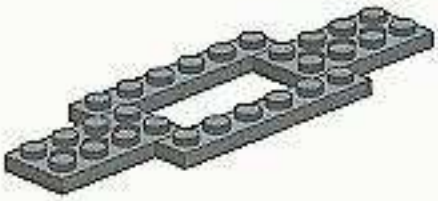

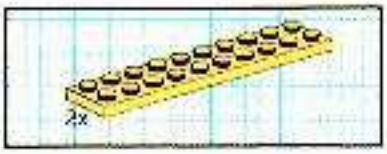

2

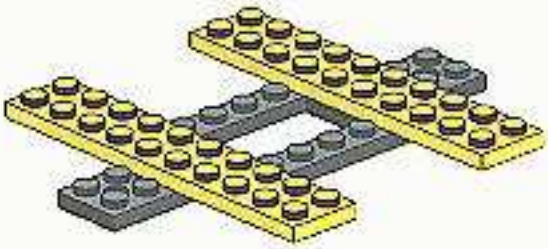

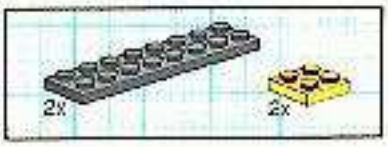

3

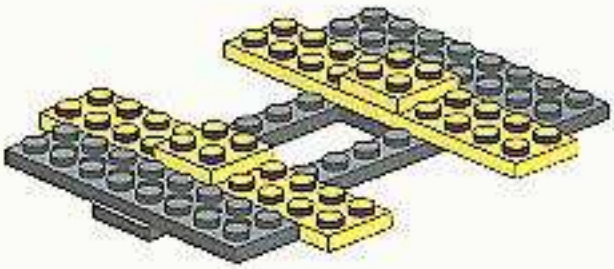

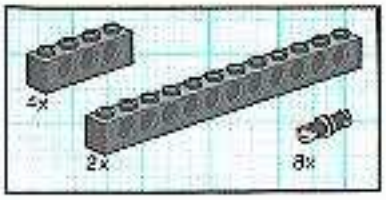

4

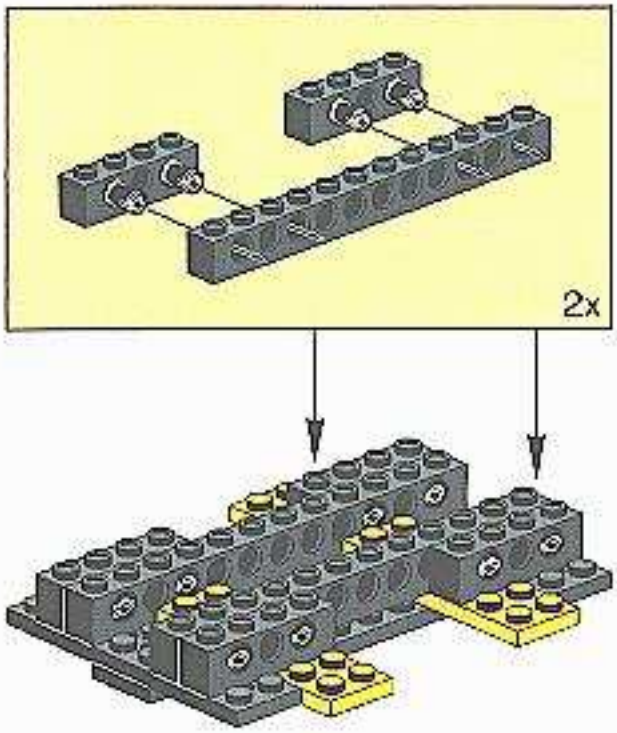

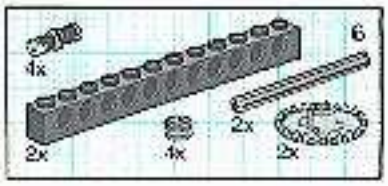

5

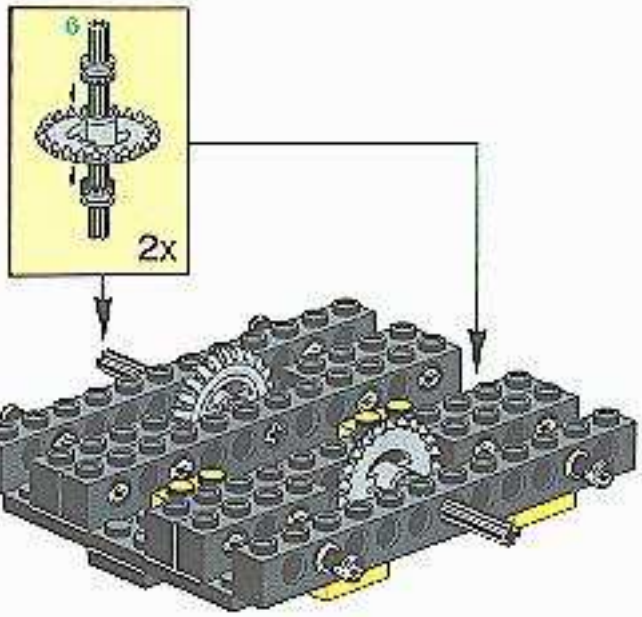

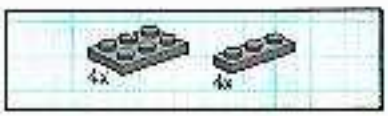

6

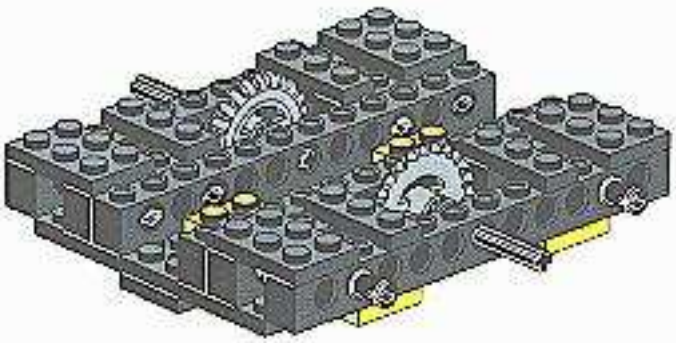

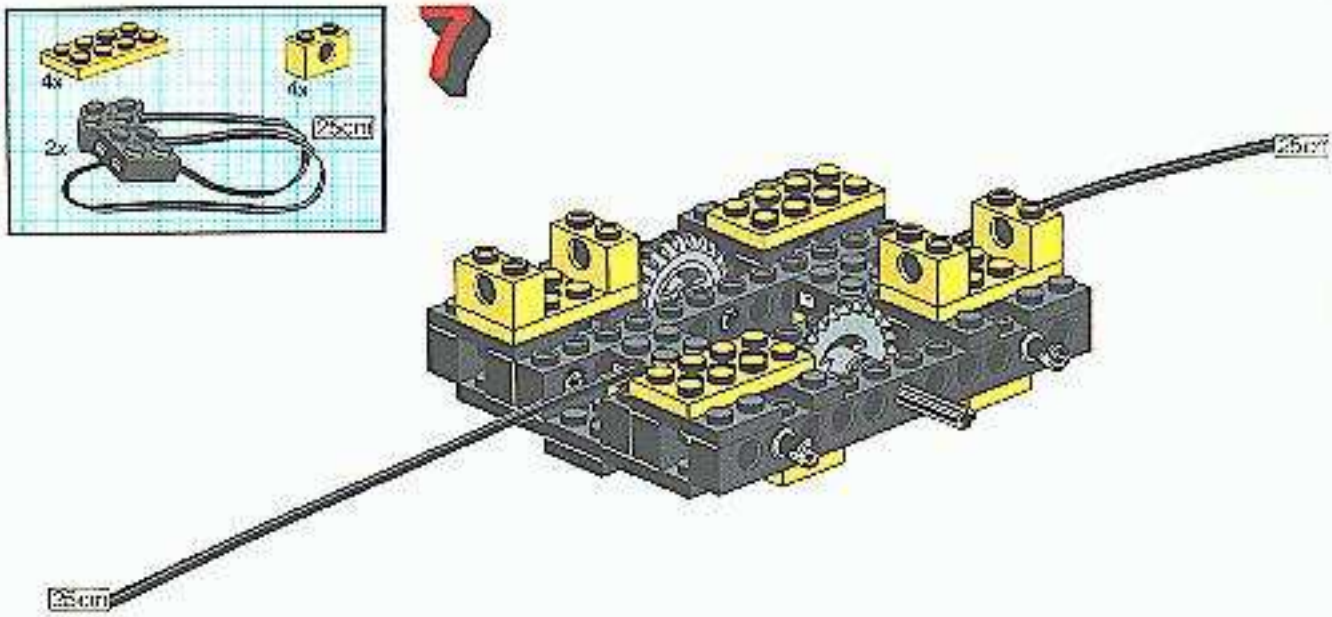
7
4x
4x
2x
25cm
25cm
25cm

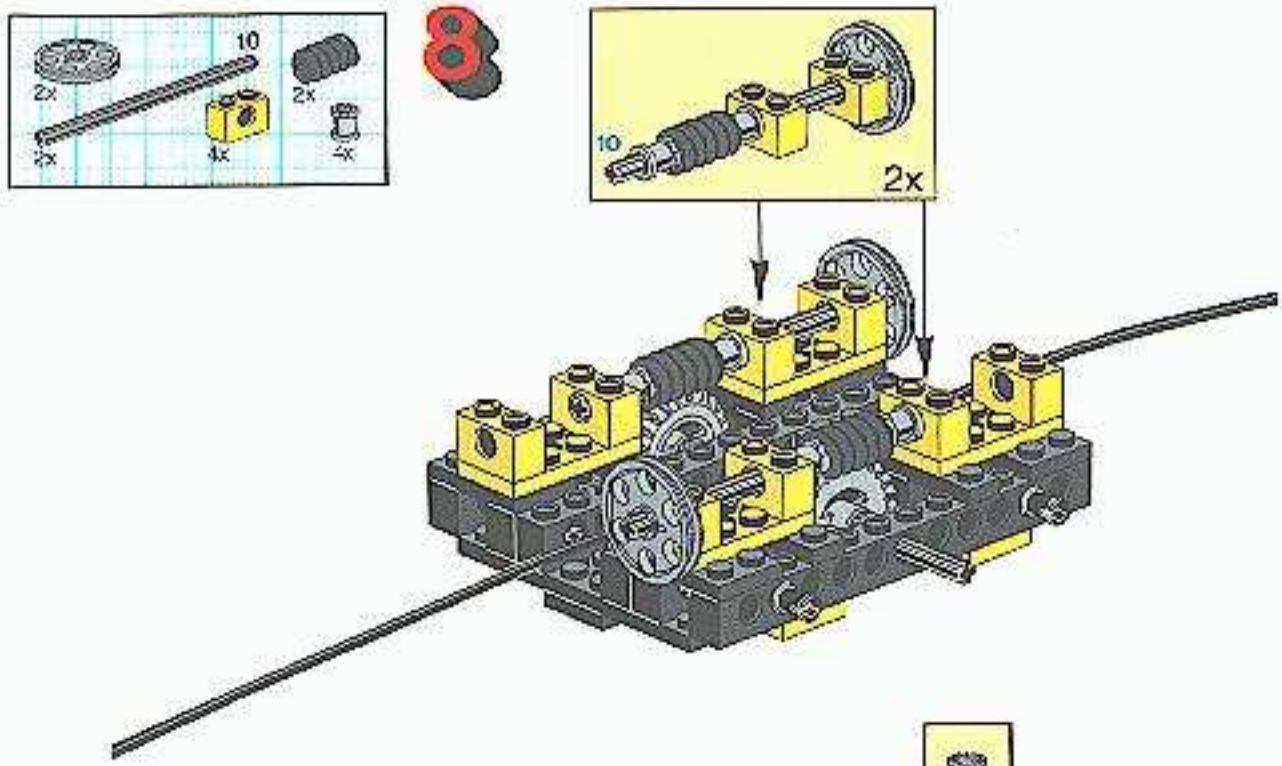
8
10
2x
2x
2x
4x
4x
10
2x

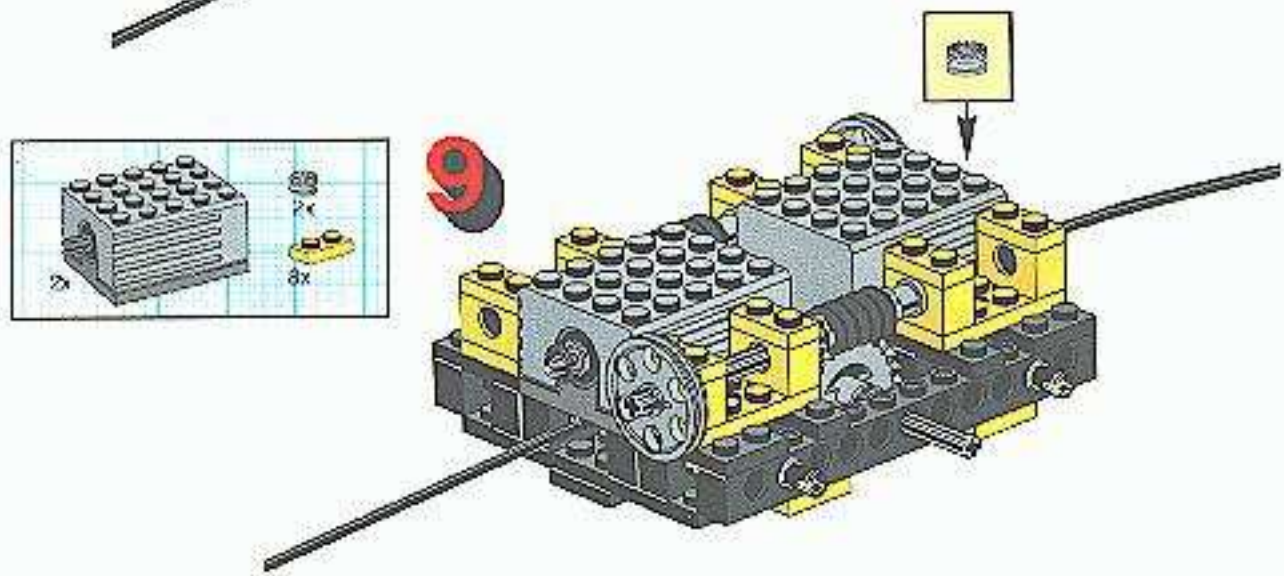
9
2x
8x

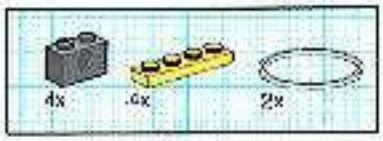

10

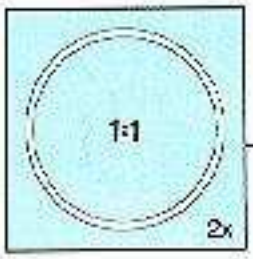

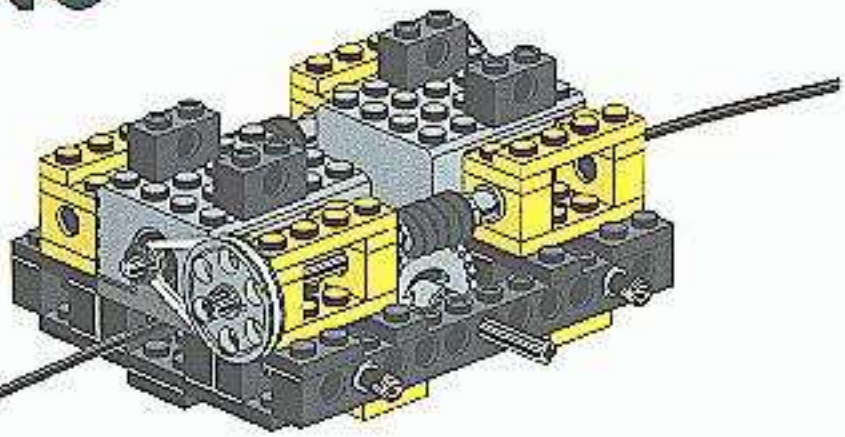

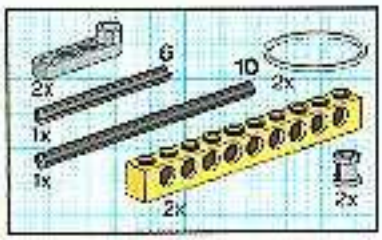

11

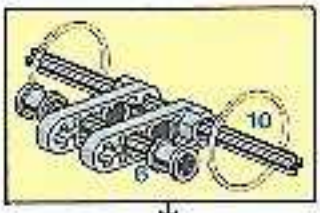

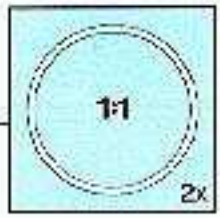

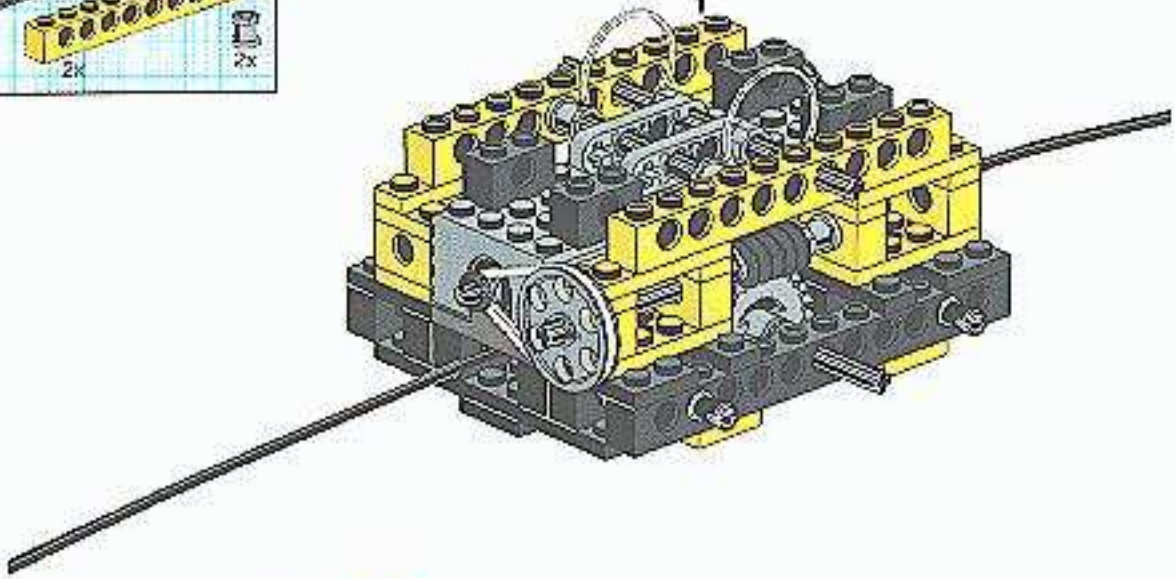

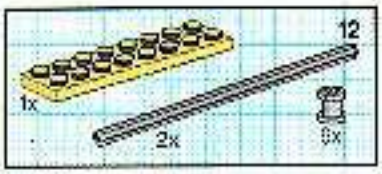

12

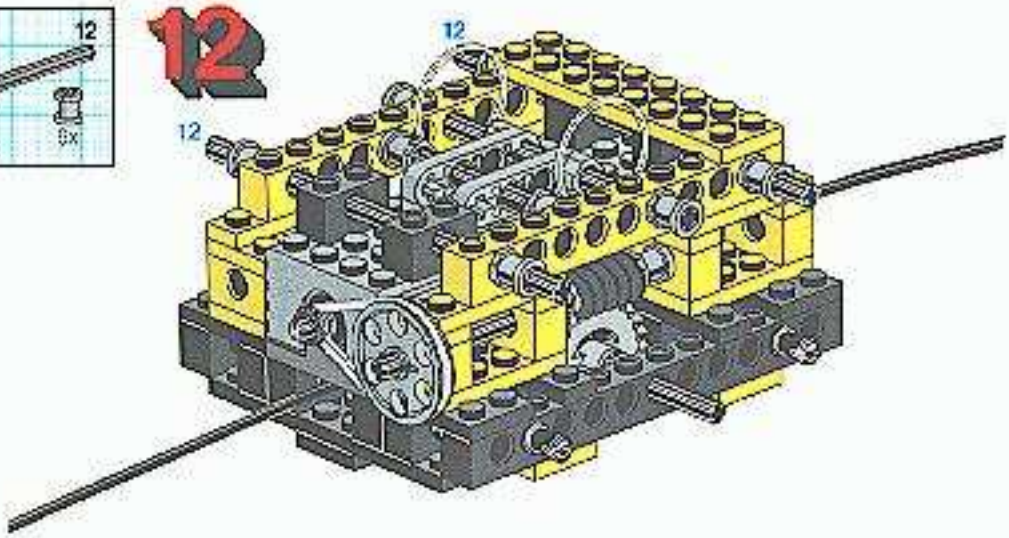

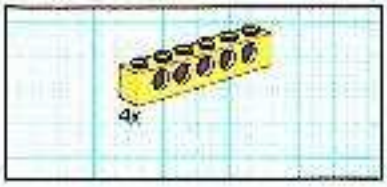

13

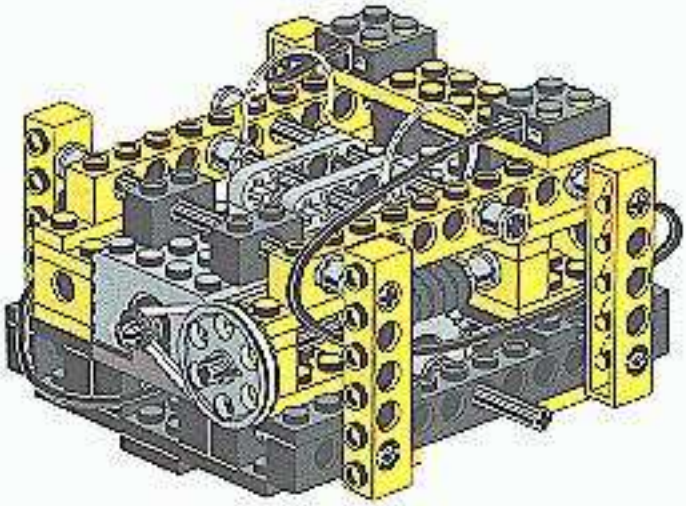

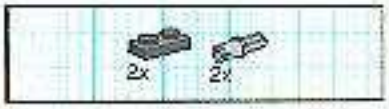

14

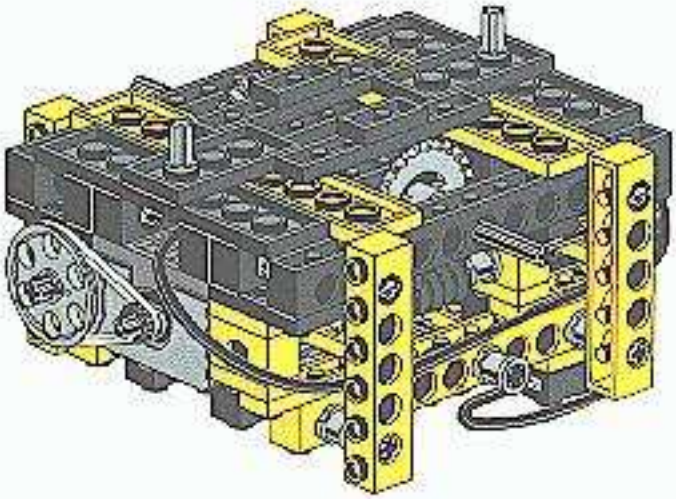

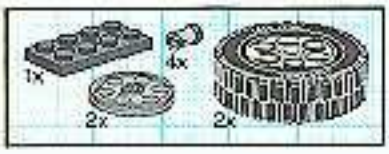

15

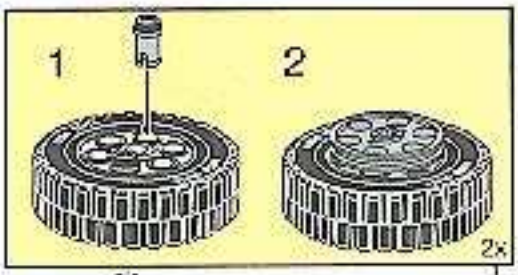

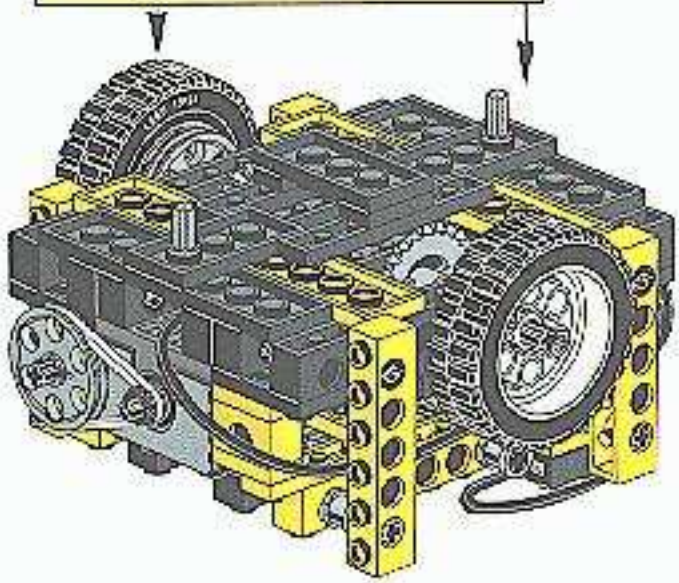

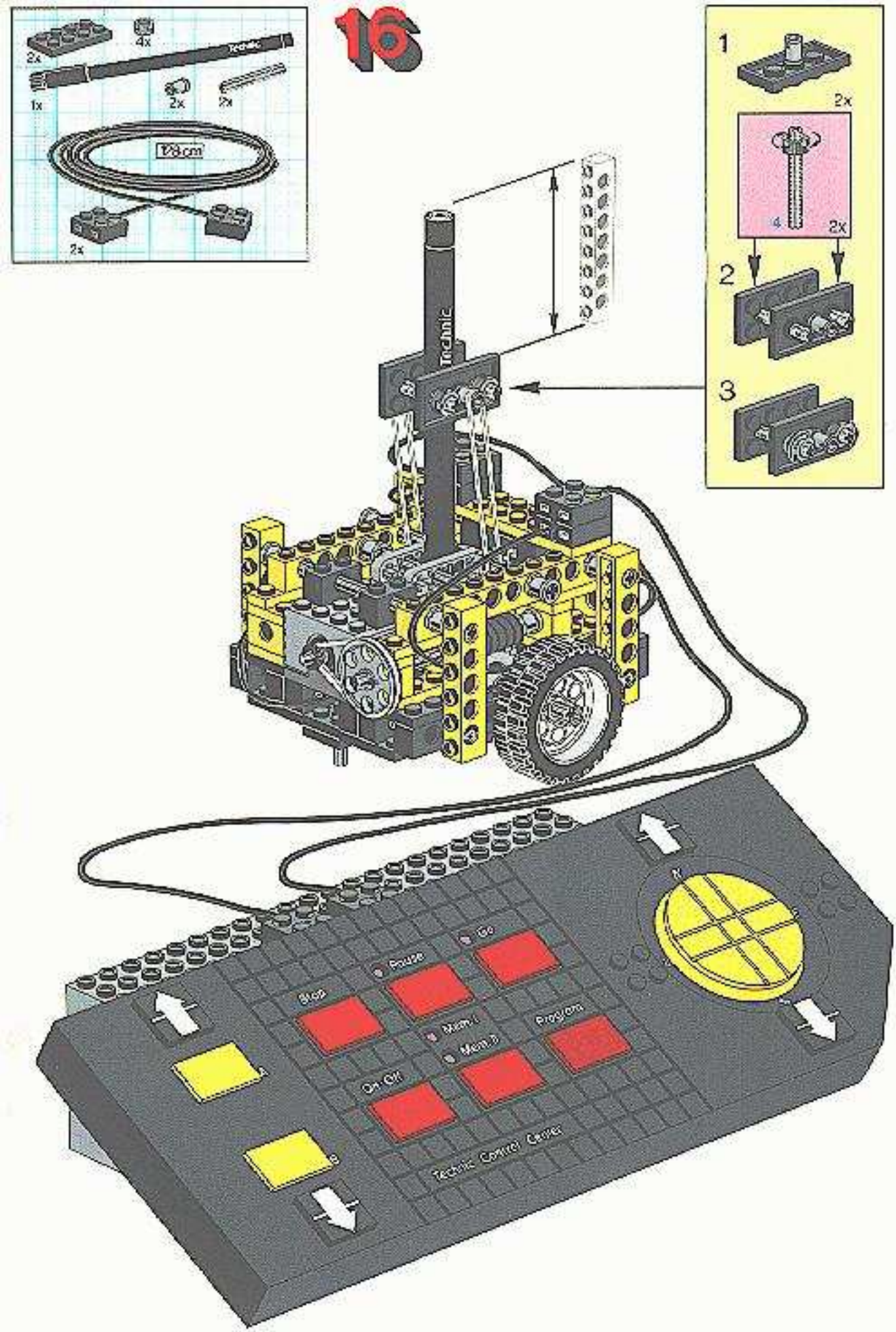
16
2x
4x
1x
2x
2x
2x
1
2x
4
2x
2
3
Technic
Stop
Pause
Go
Mem 1
Mem 2
Program
On/Off
Technic Control Center

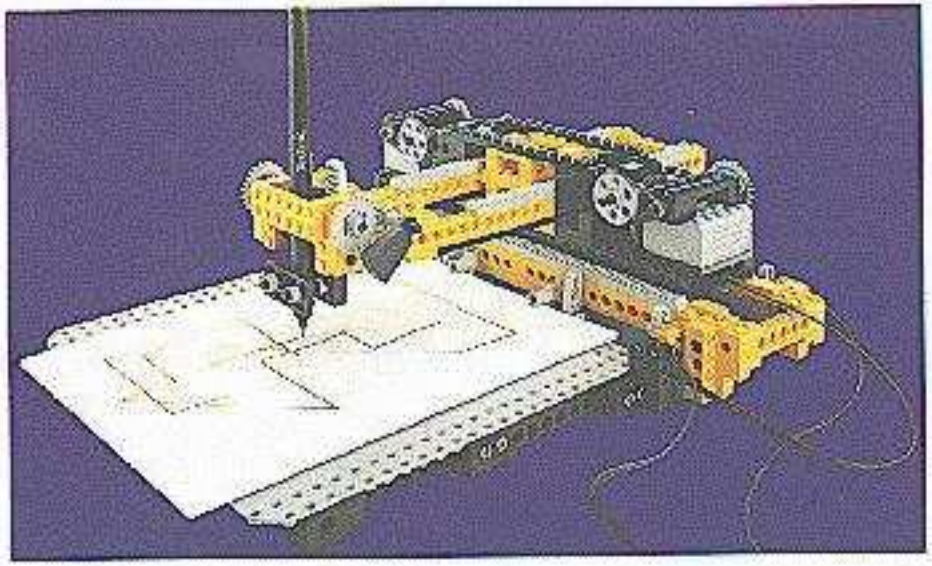

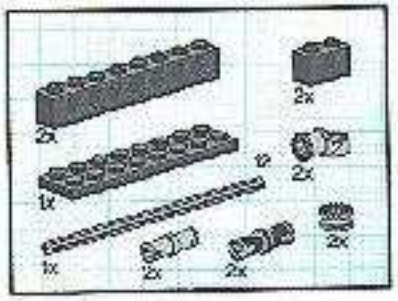

1

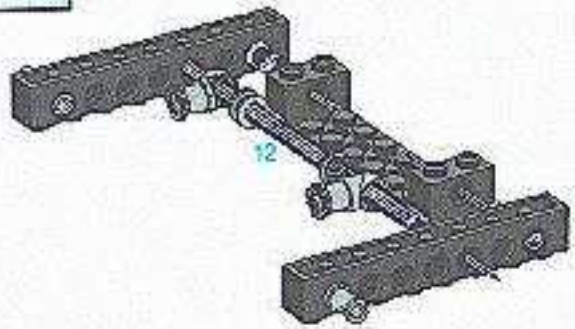

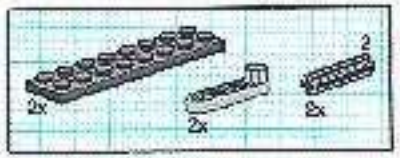

2

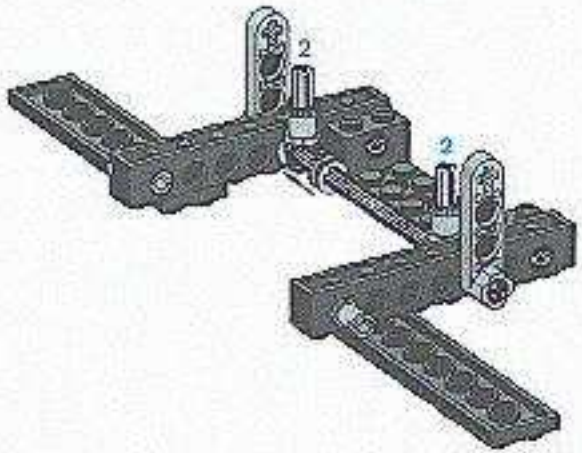

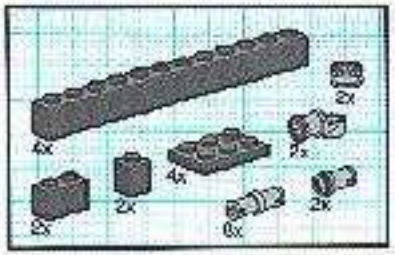

3

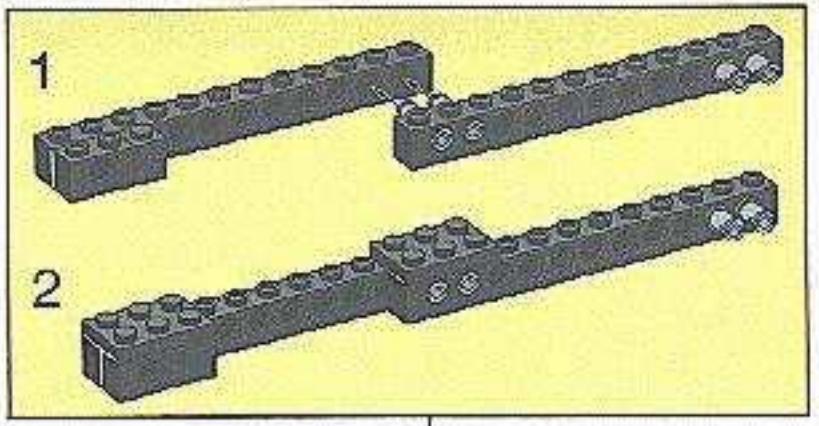

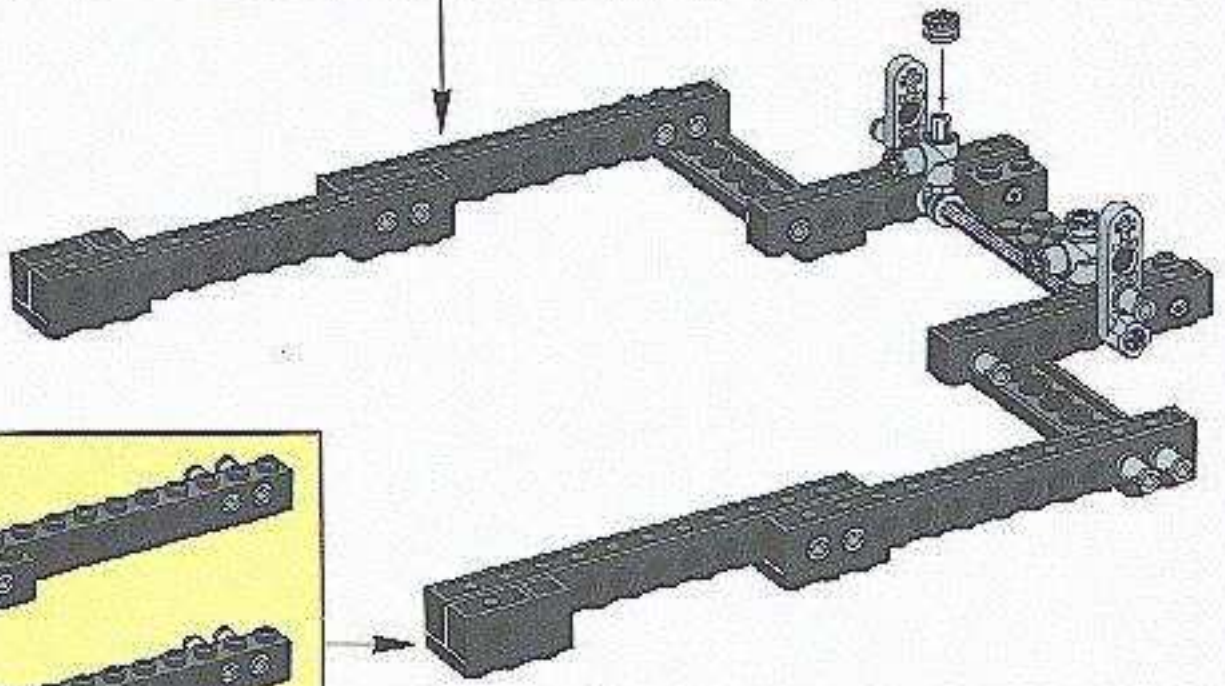

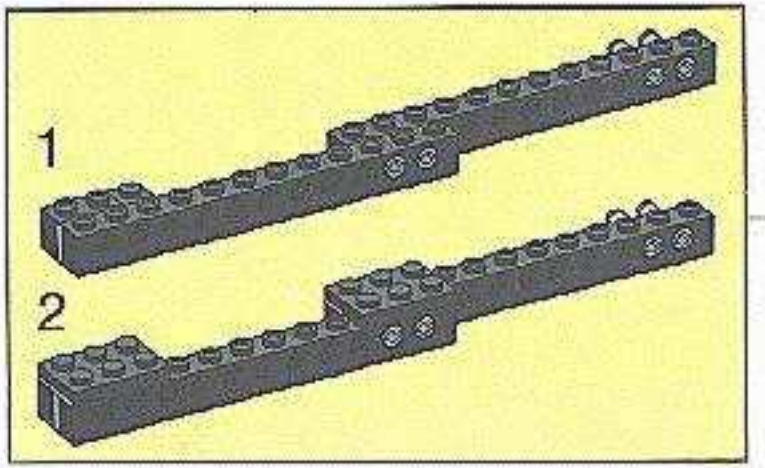

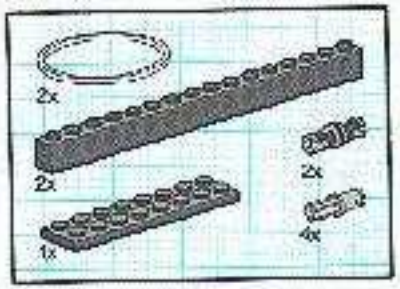

4

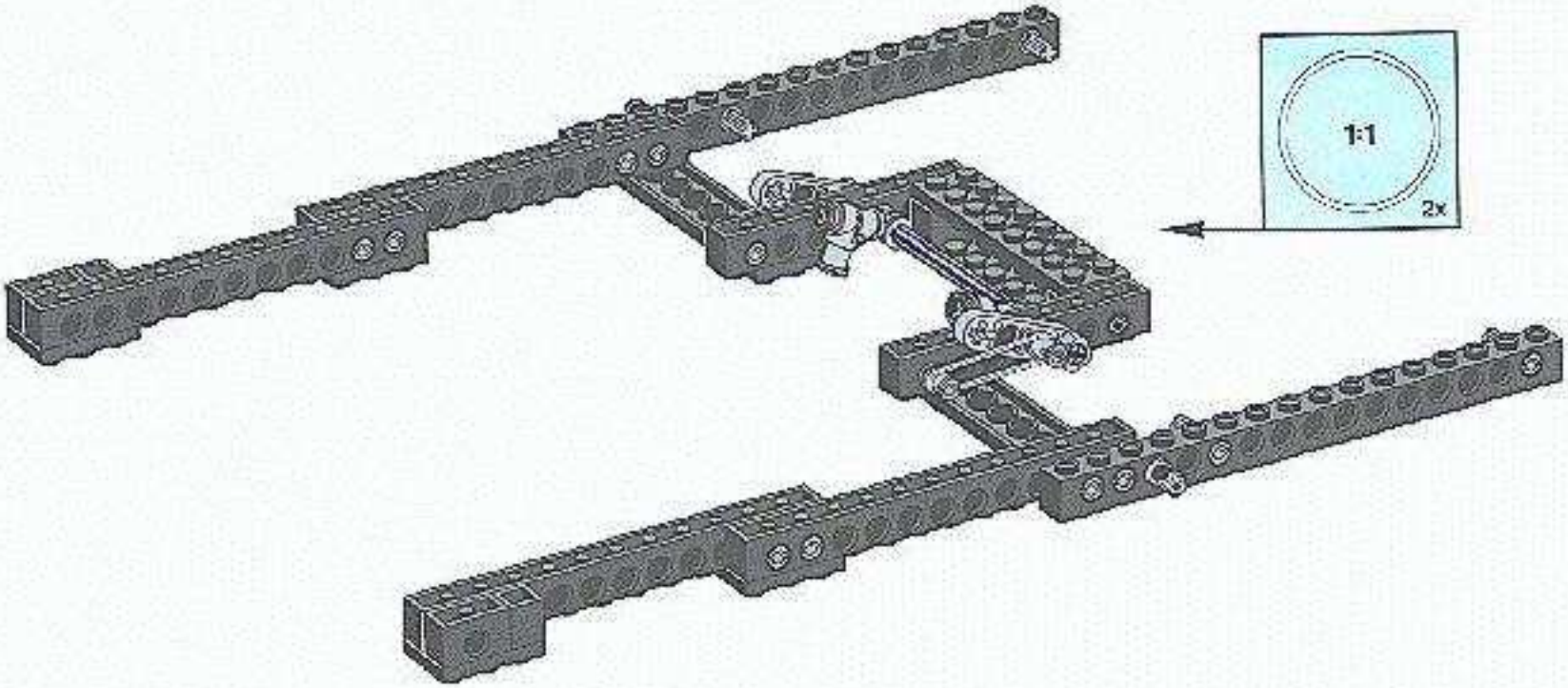

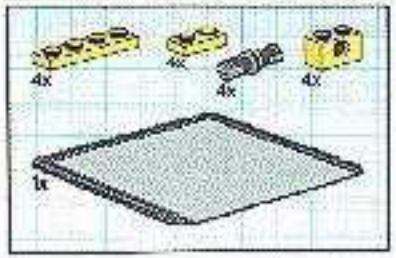

5

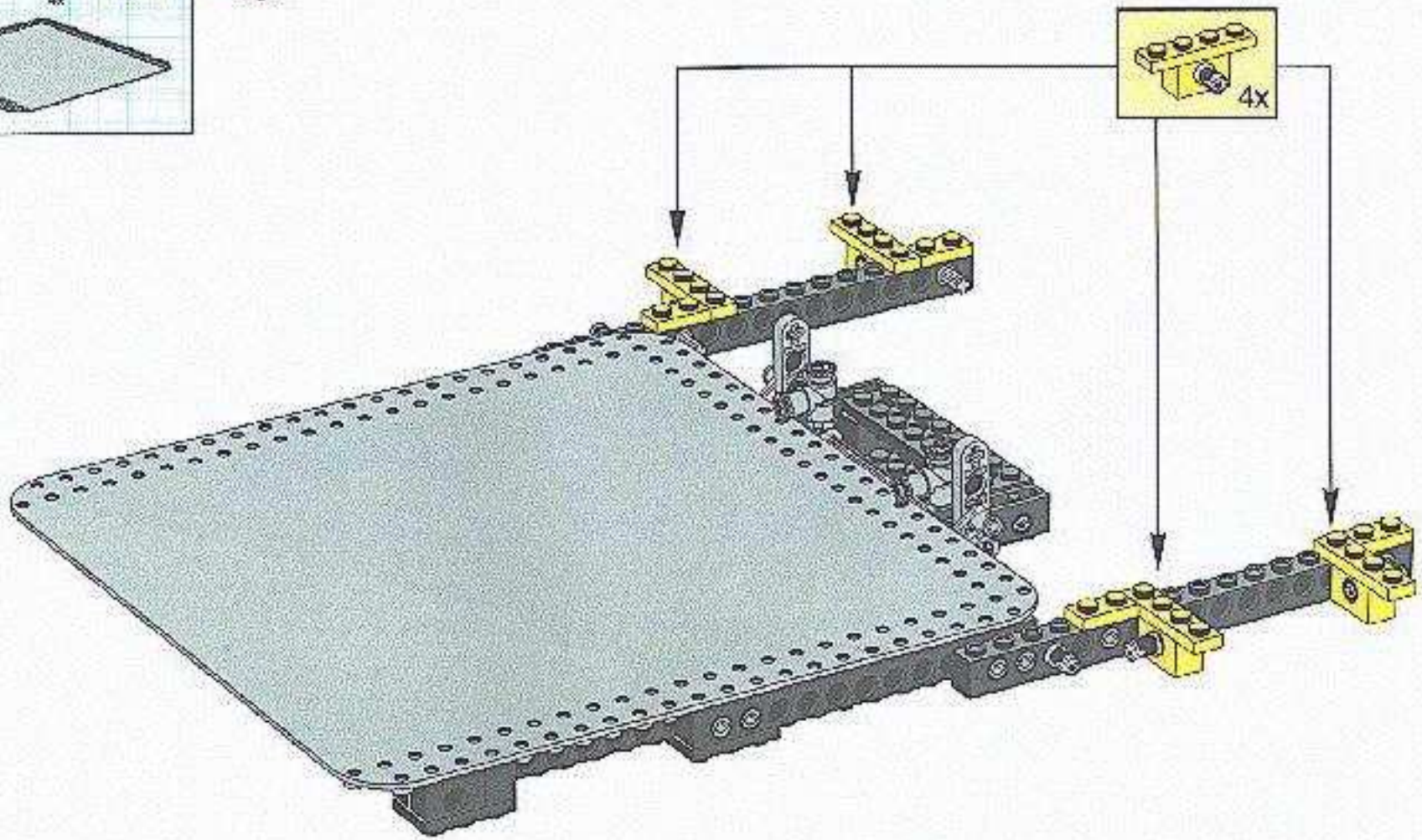

6

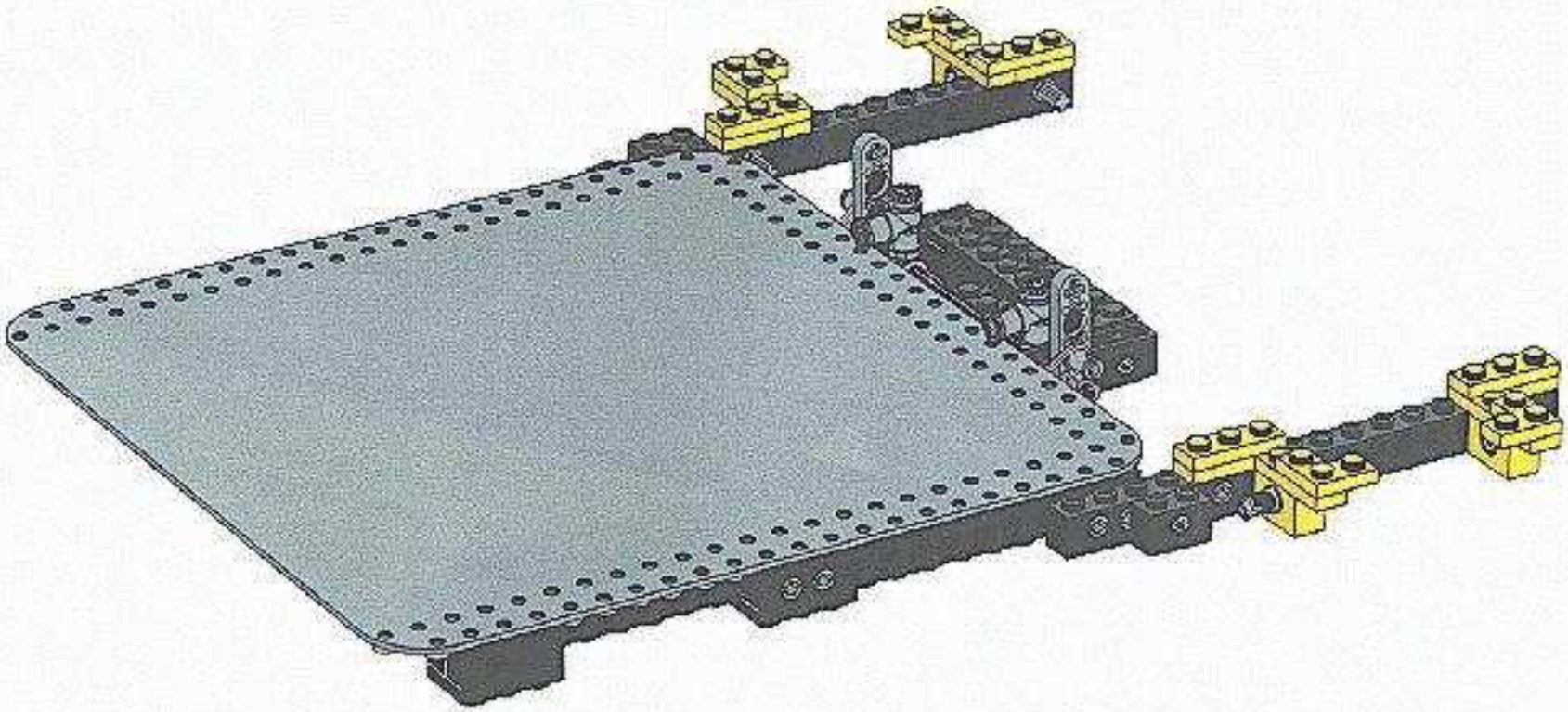

7

7

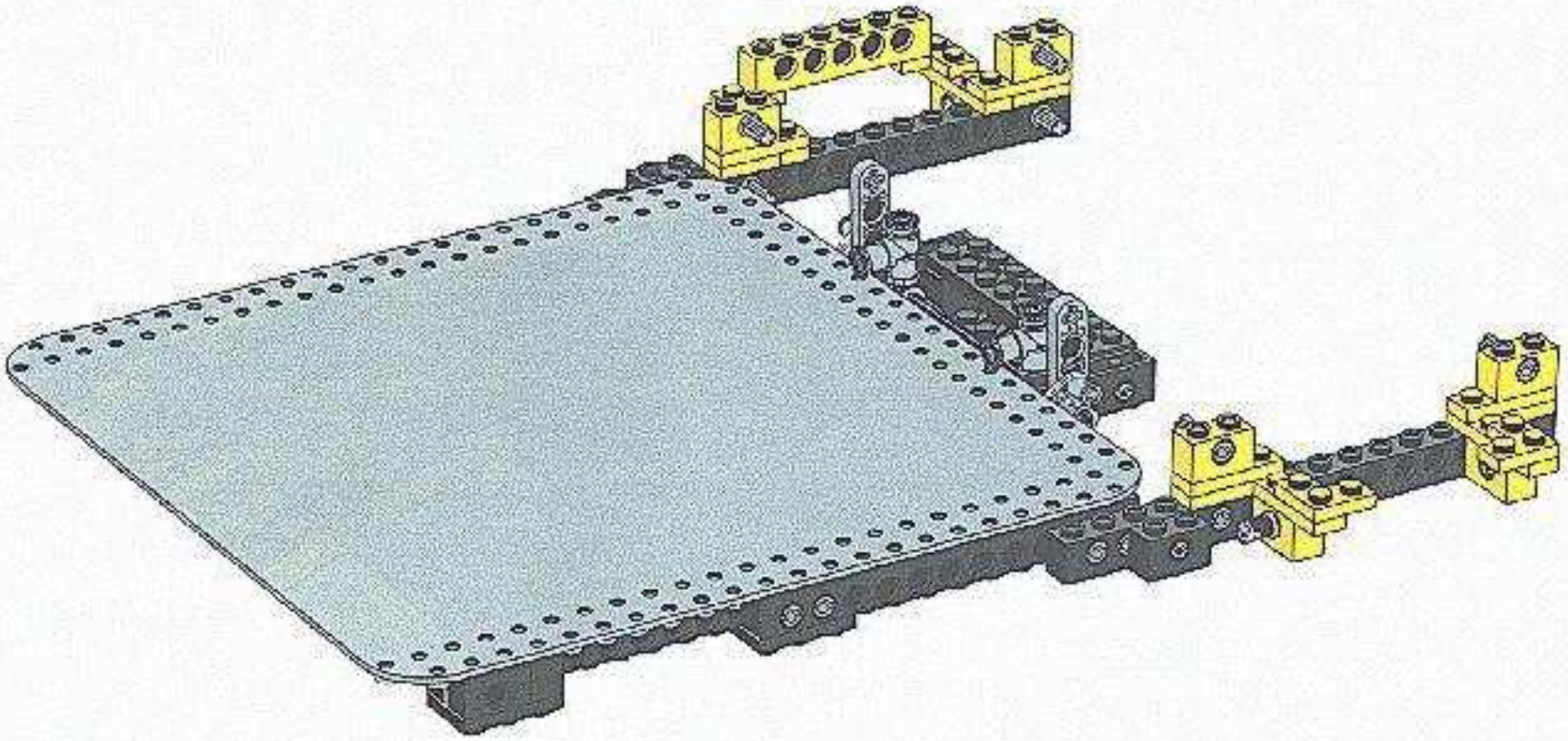

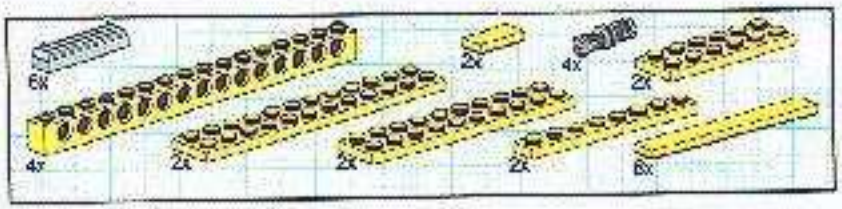

8

1
2
3

1
2
3

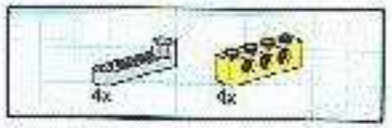

9

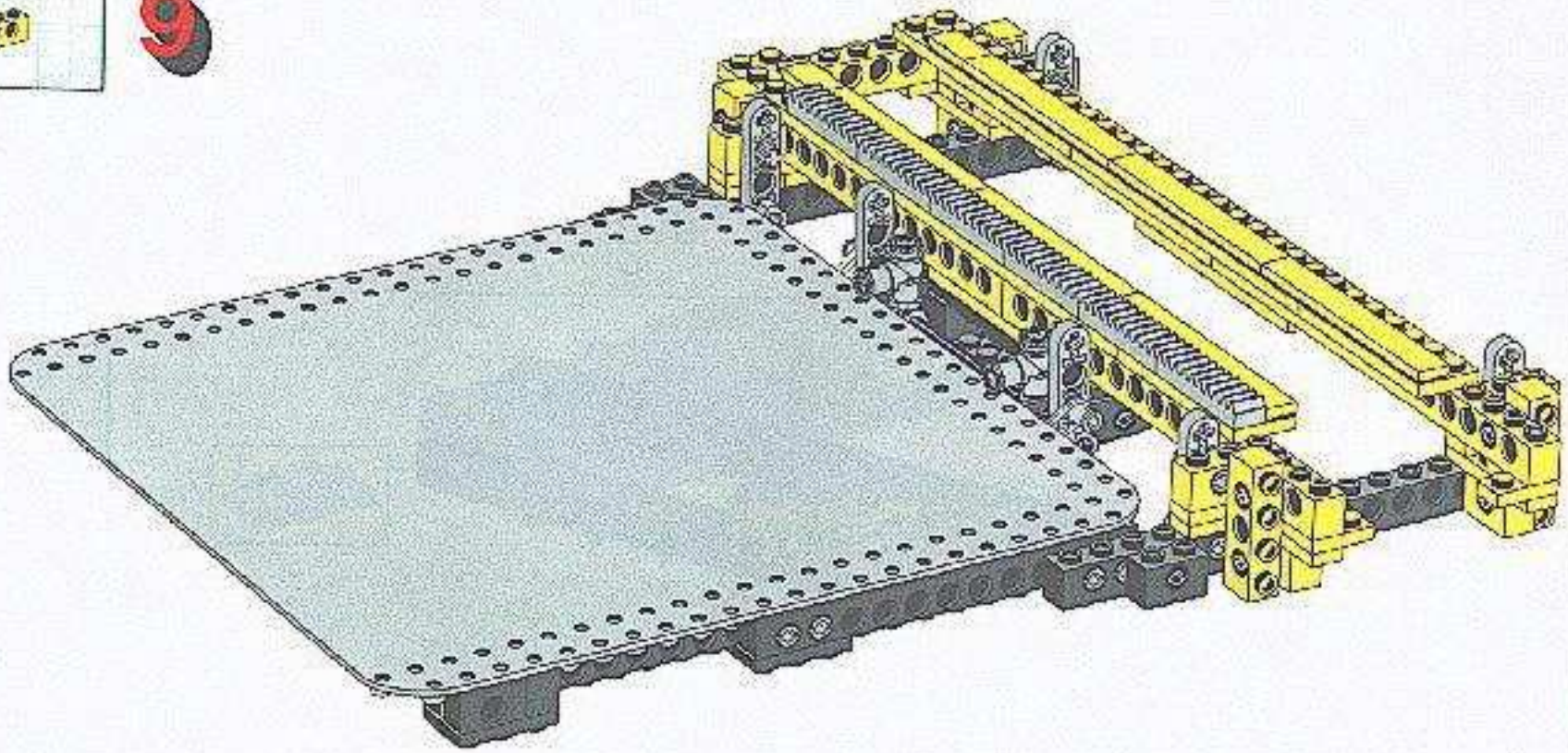

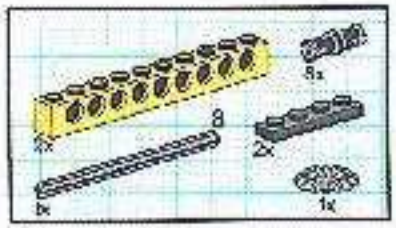

10

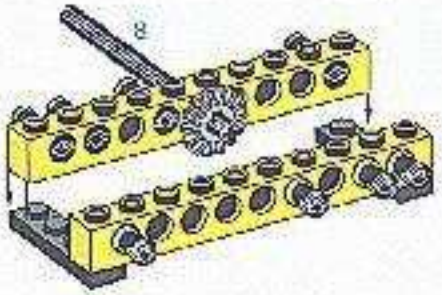

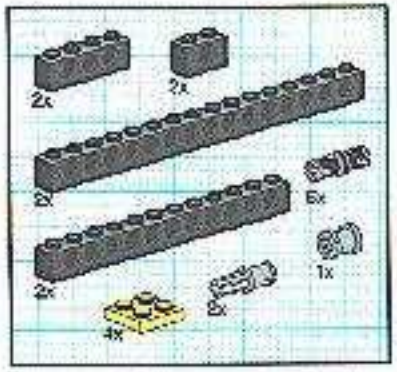

11

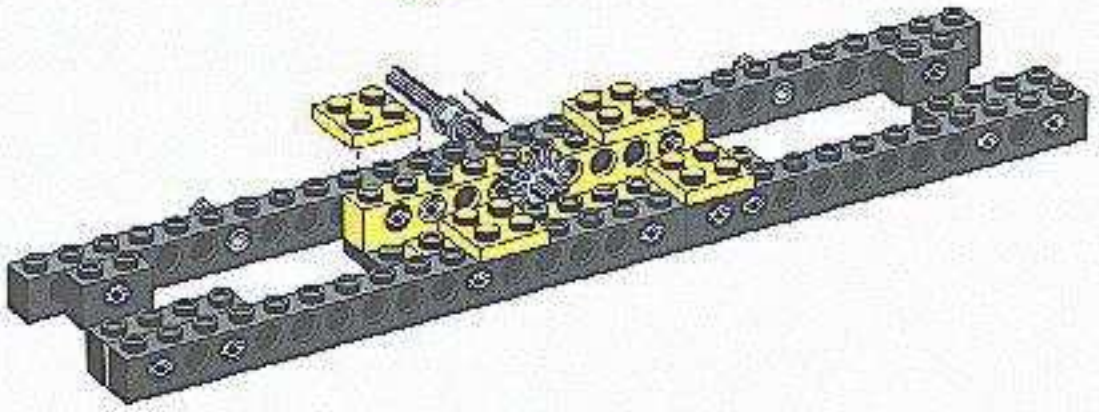

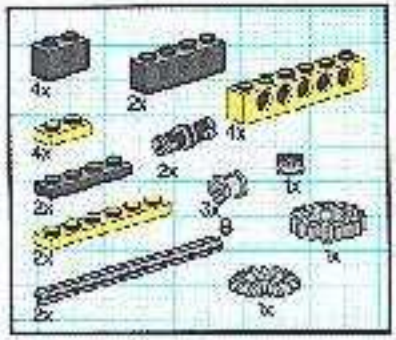

12

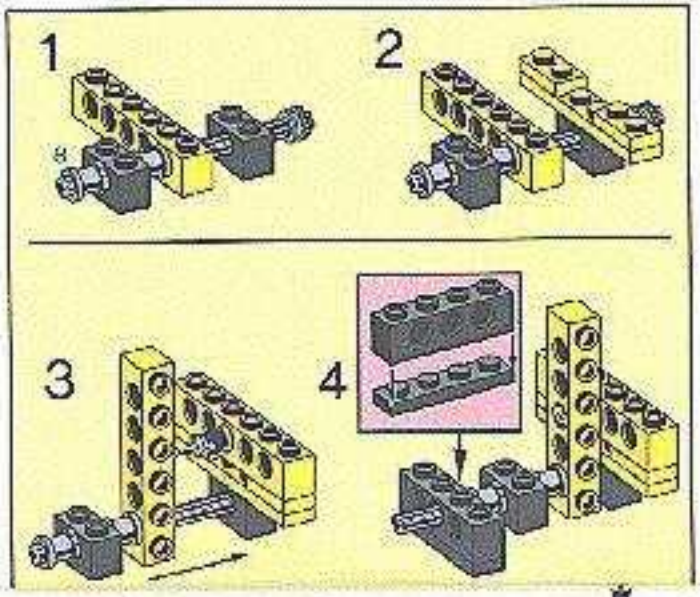

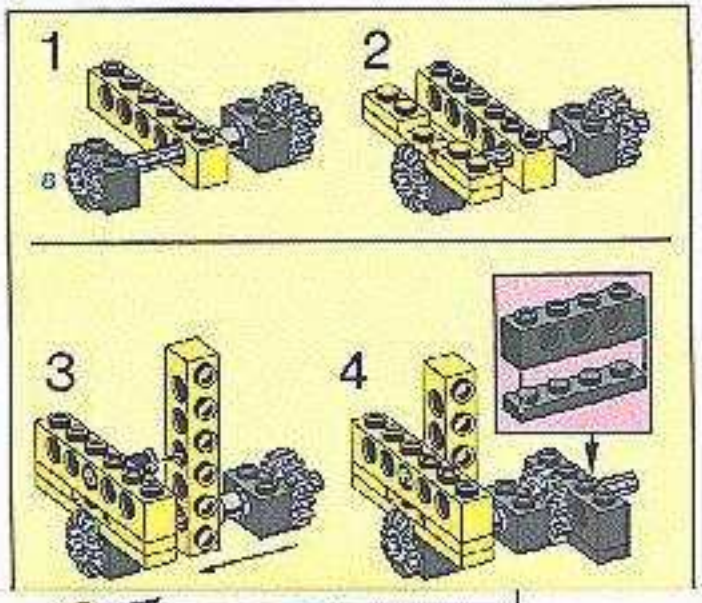

13

14

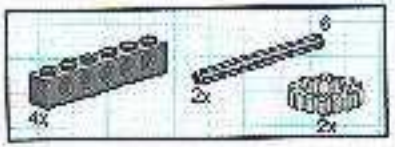

15

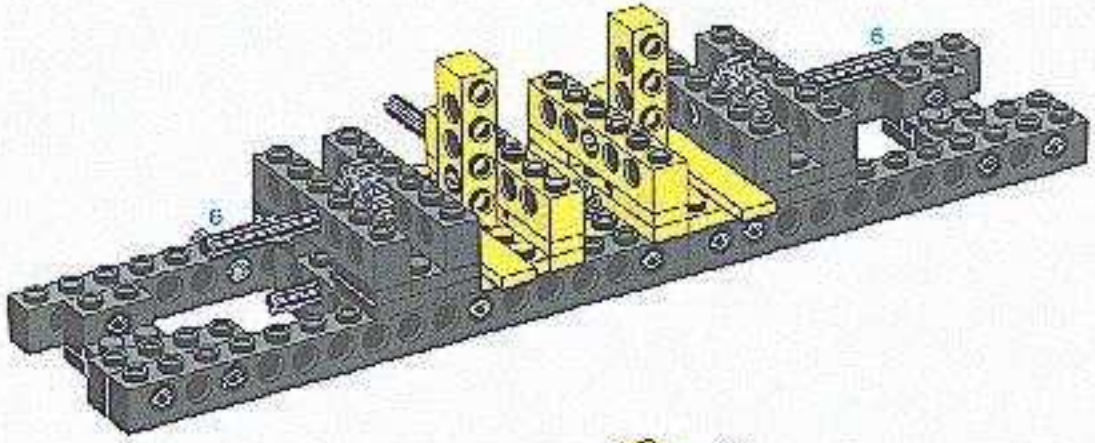

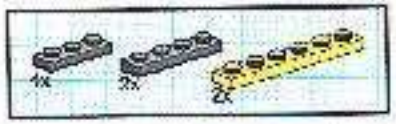

16

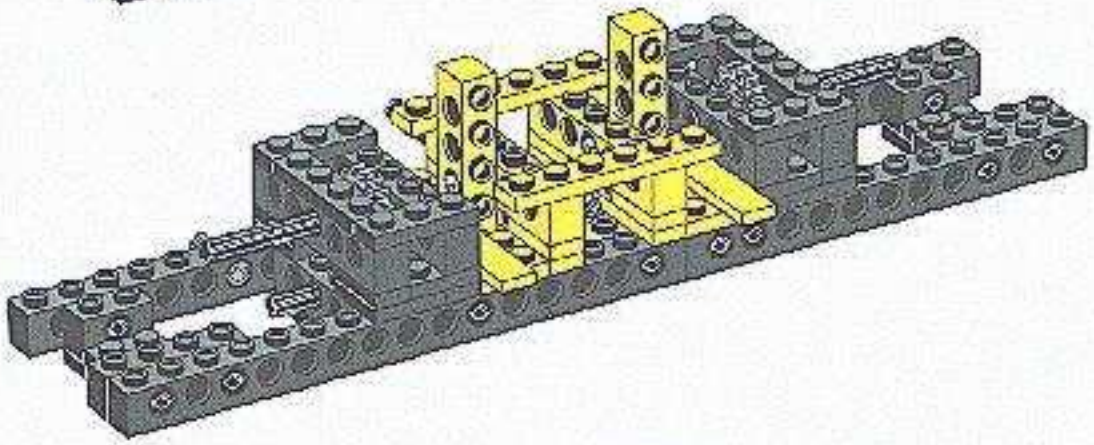

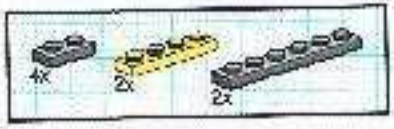

17

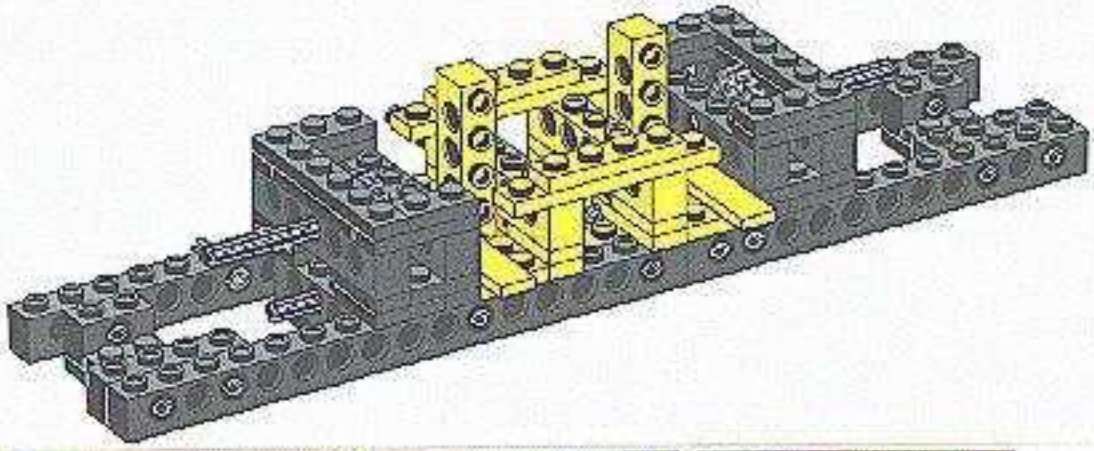

18

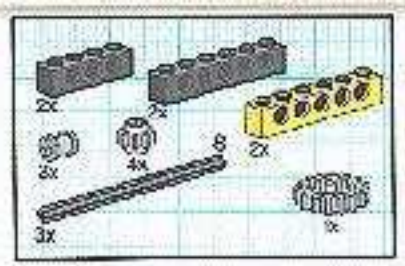

18

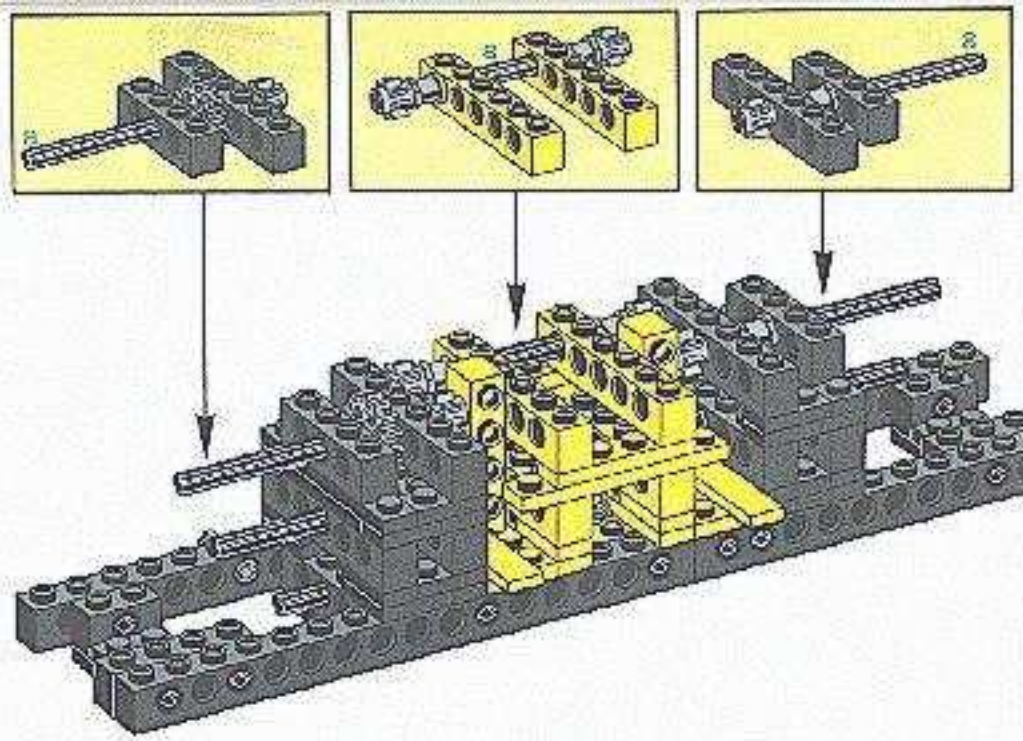

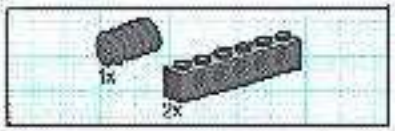

19

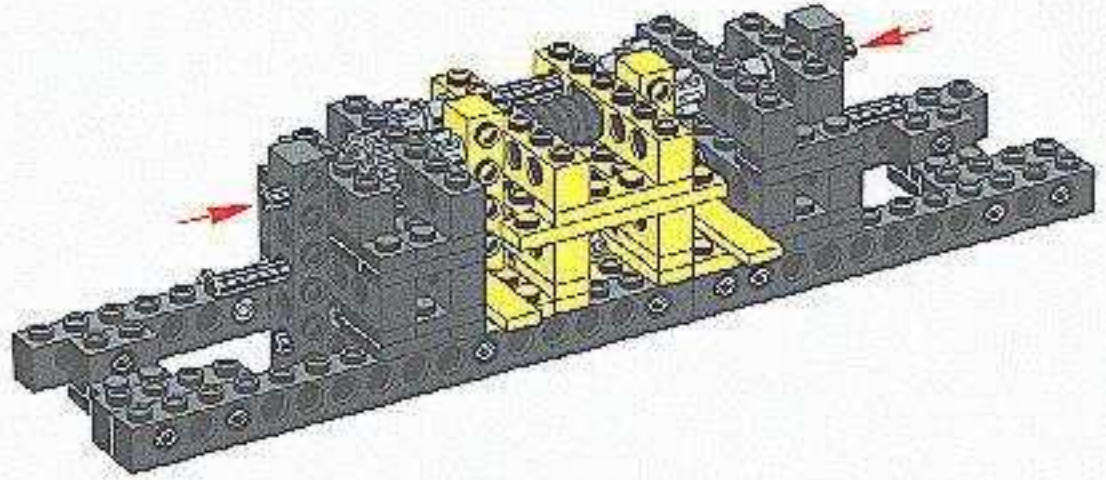

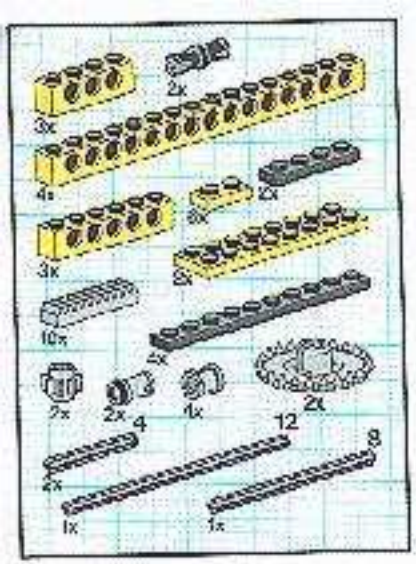

20

1

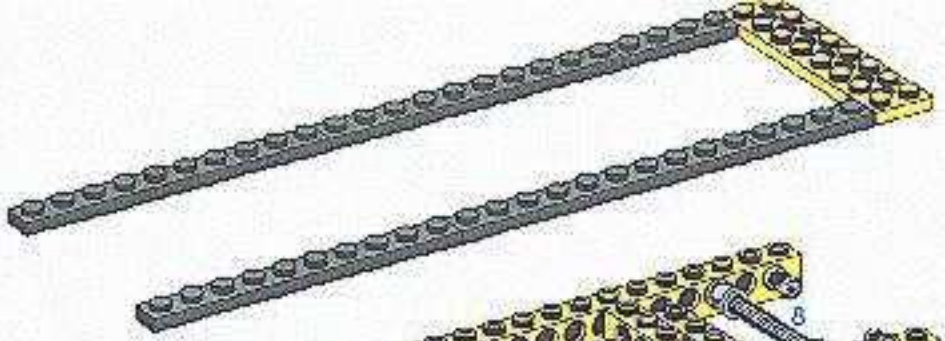

2

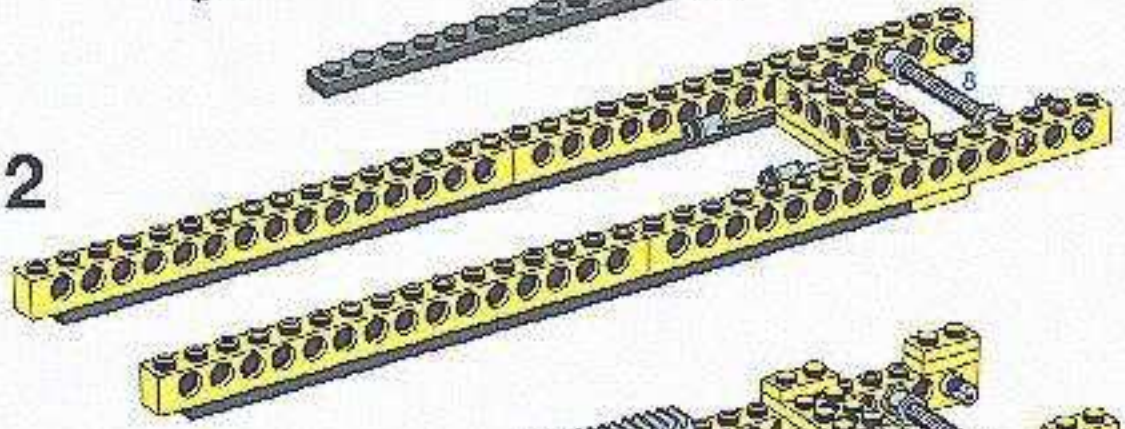

3

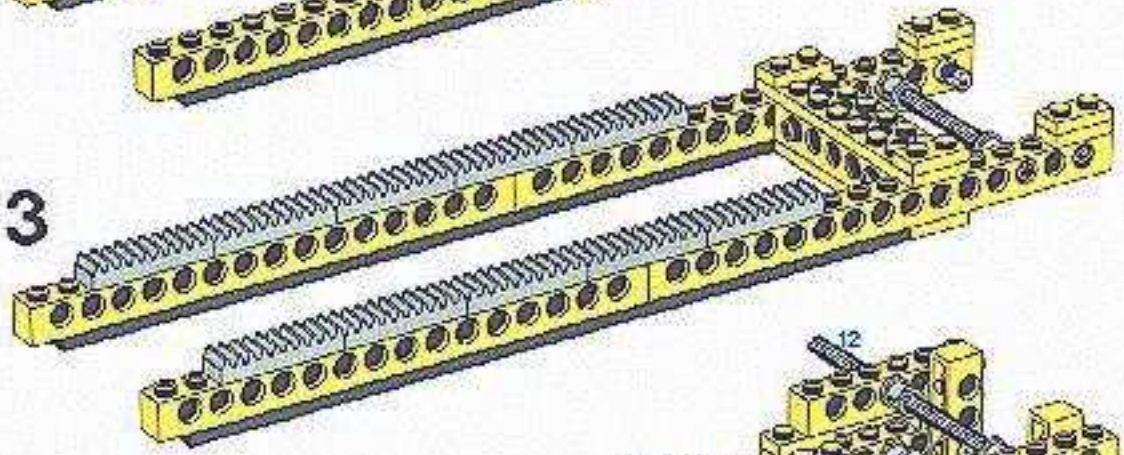

4

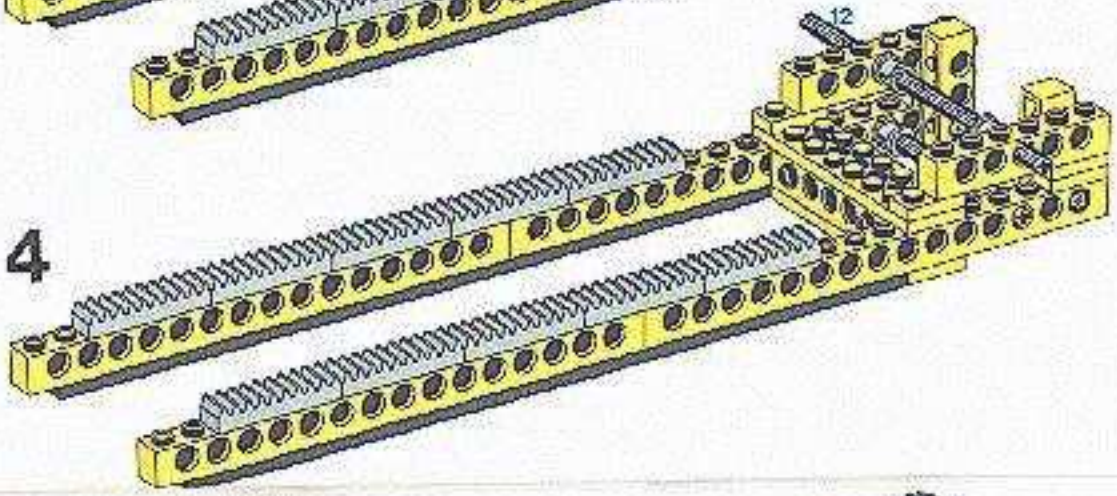

5

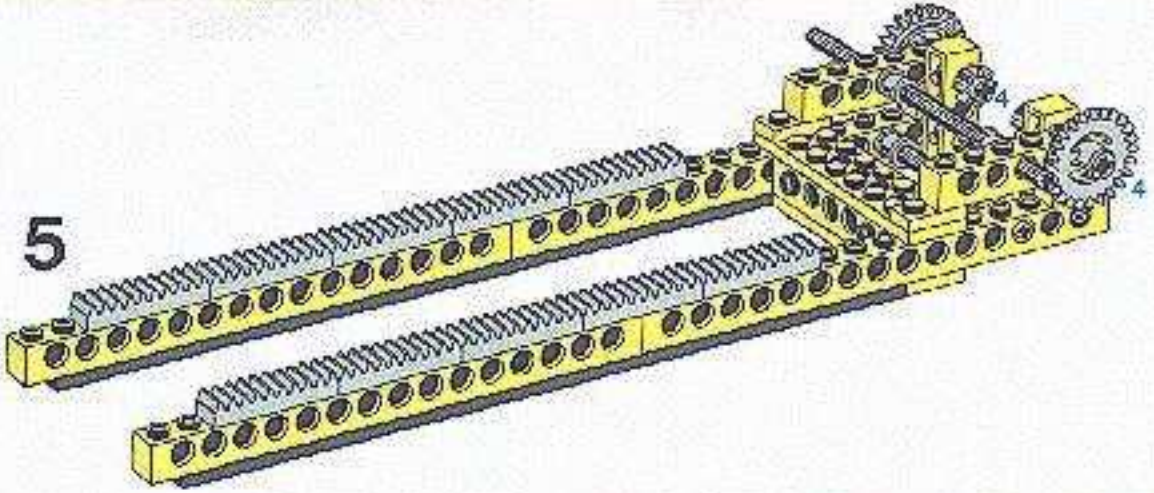

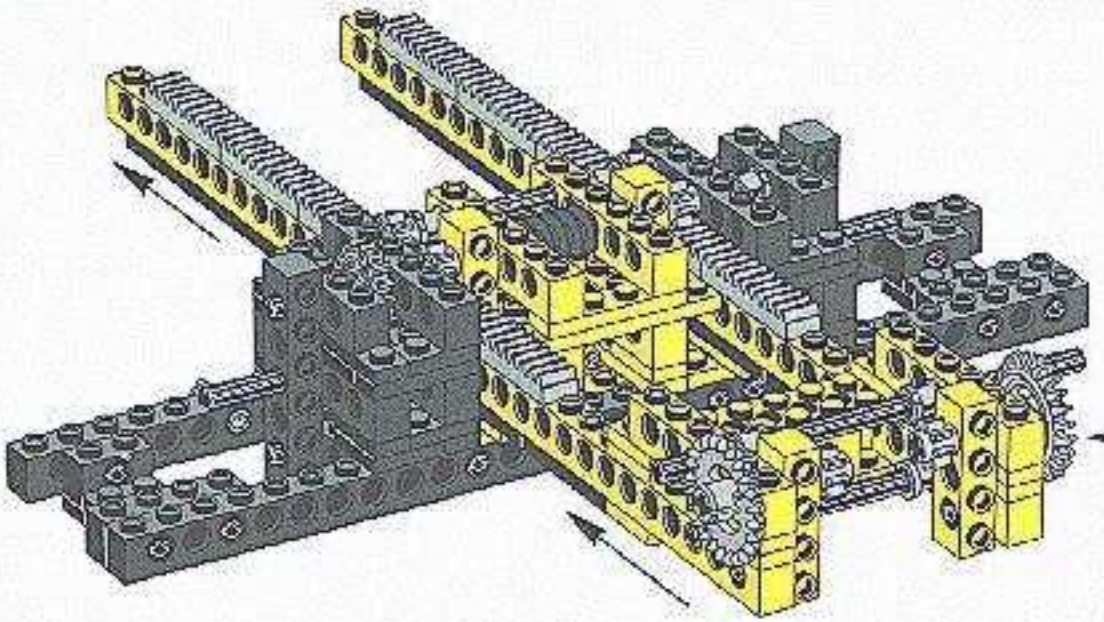

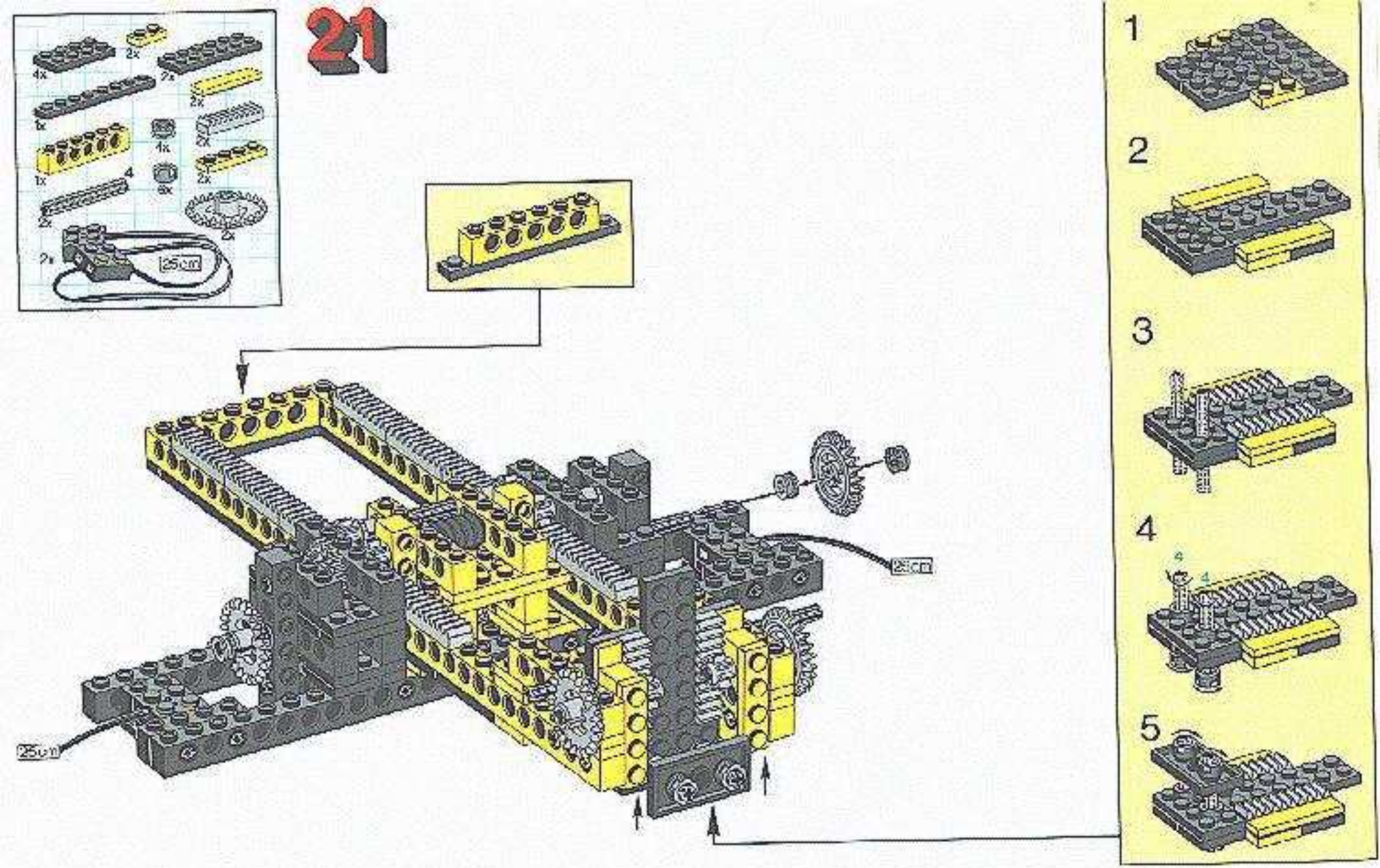
21
4x
2x
2x
2x
1x
1x
4x
2x
2x
4
8x
2x
2x
2x
25cm
25cm
25cm
1
2
3
4
5

22
4x

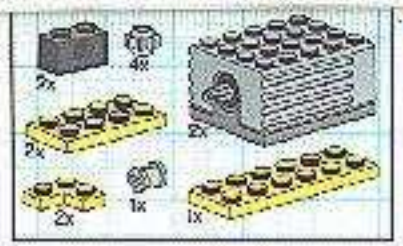

22

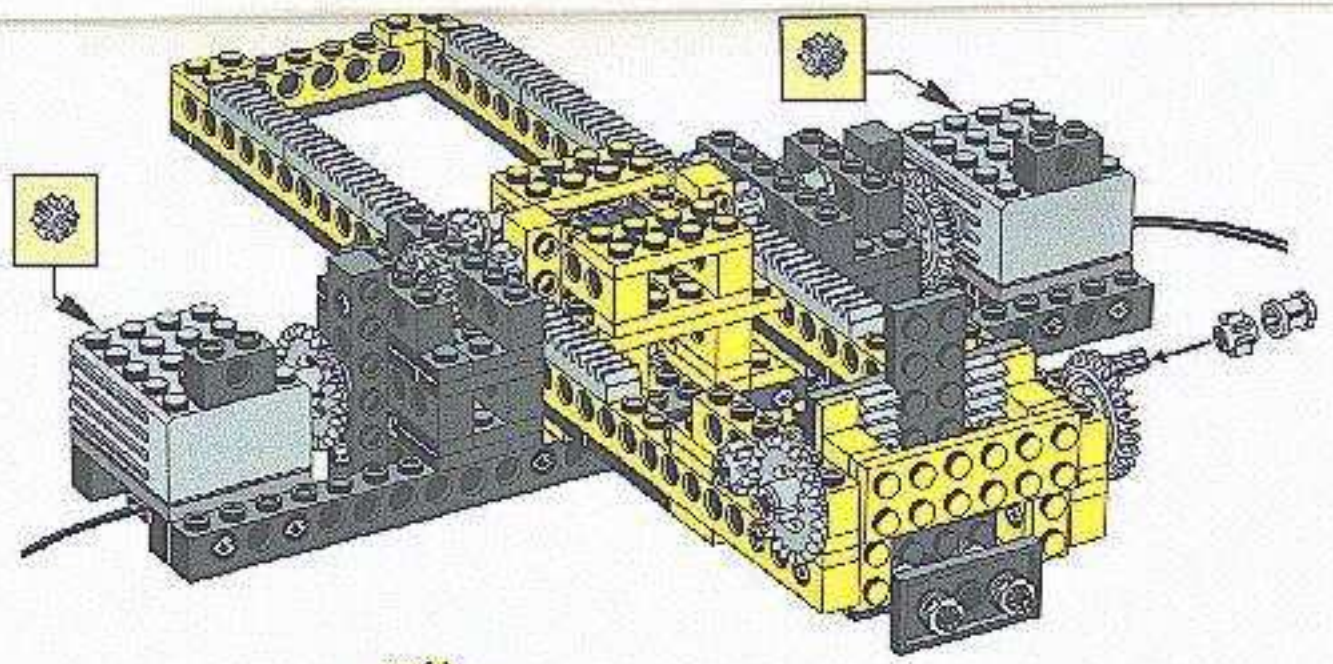

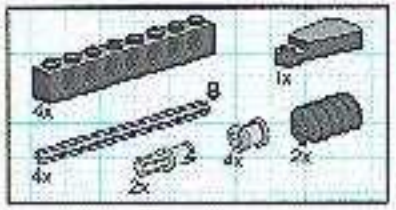

23

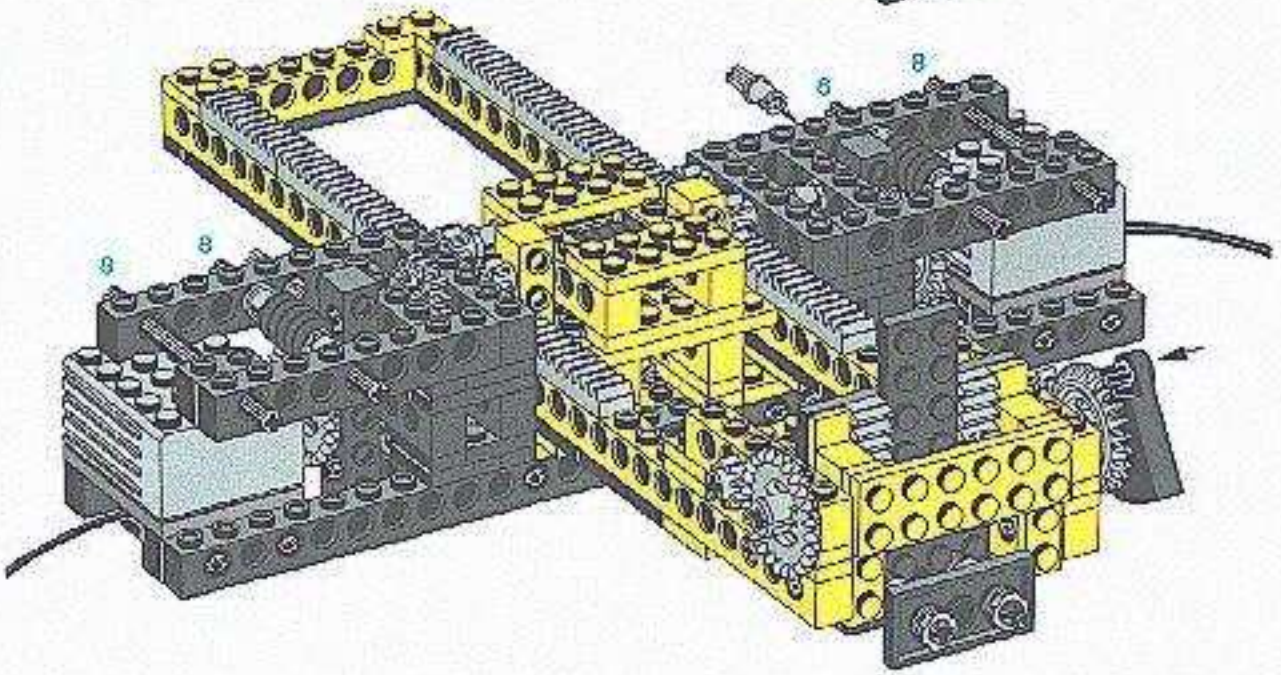

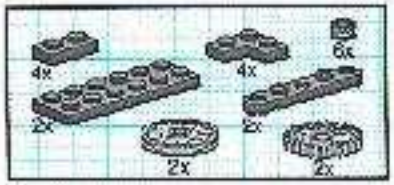

24

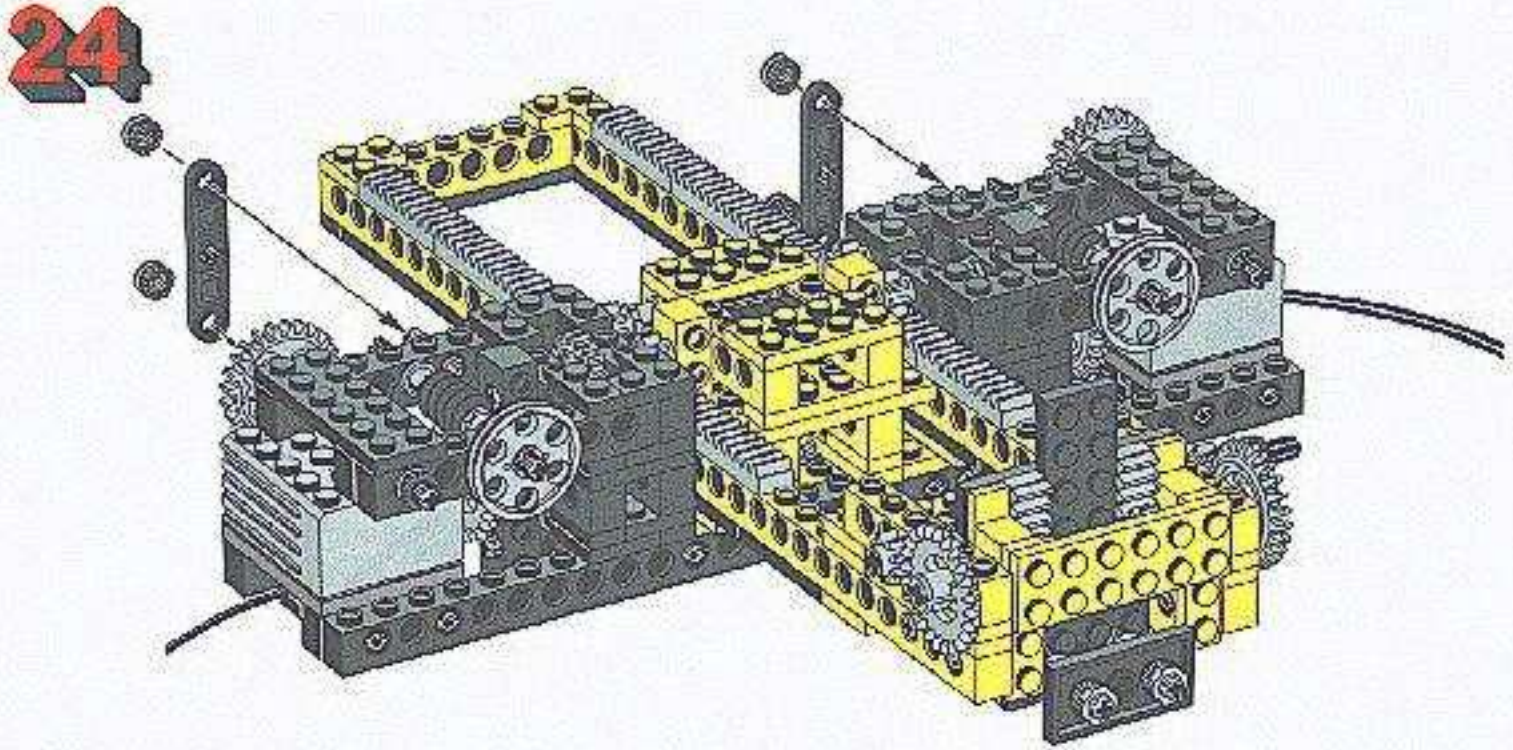

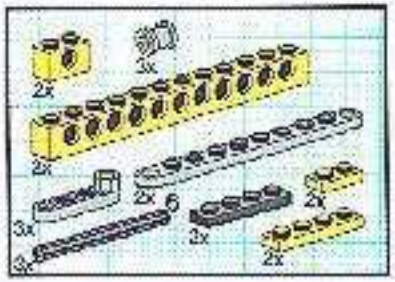

25

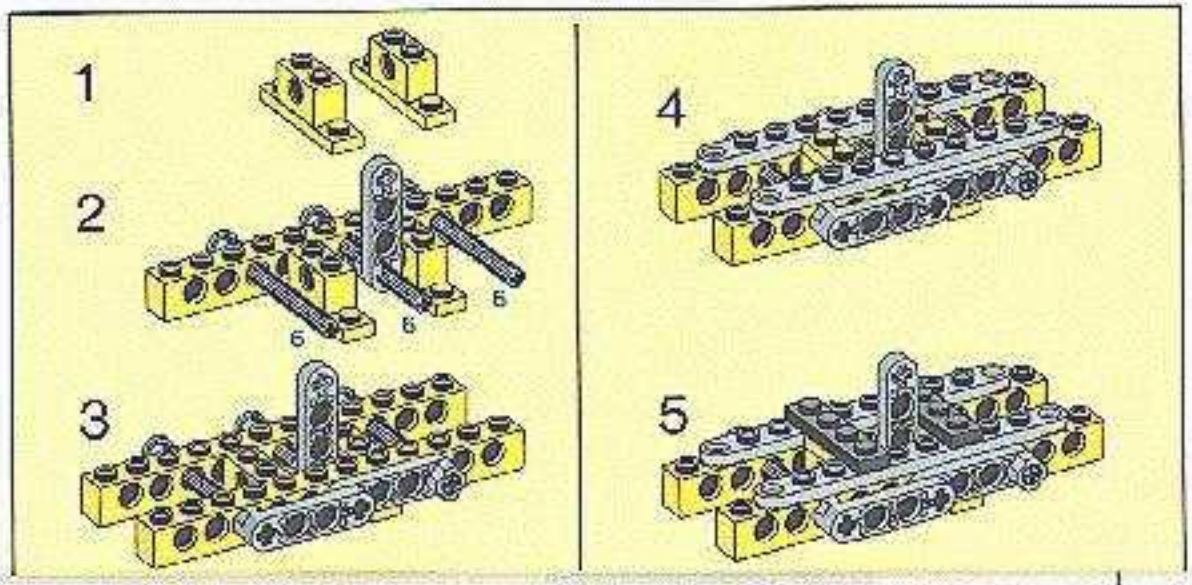

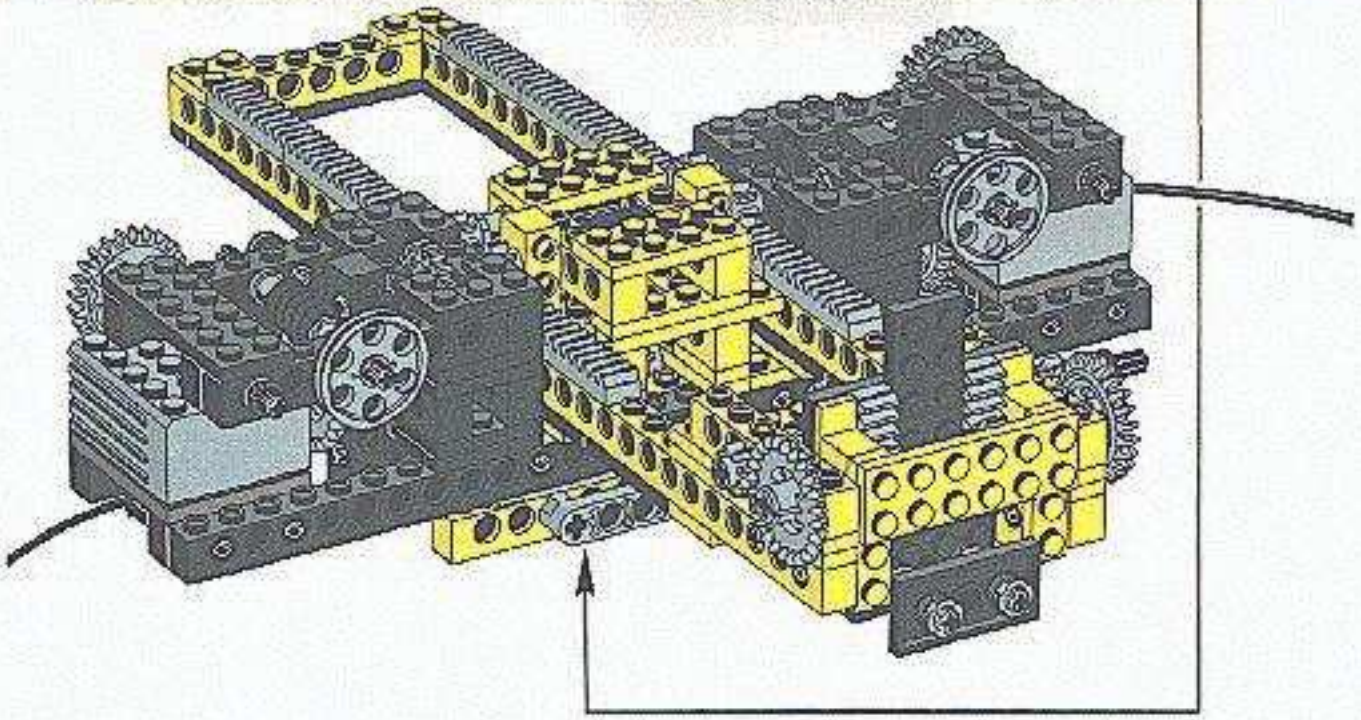

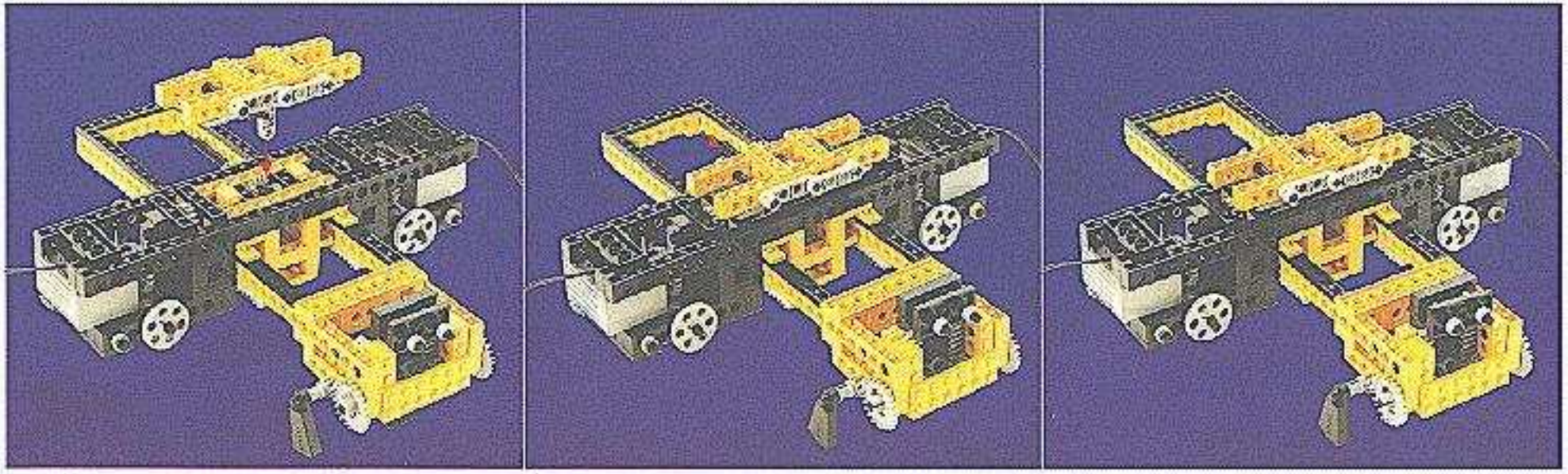

26

27

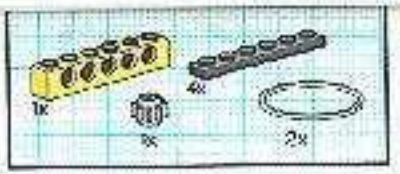

27

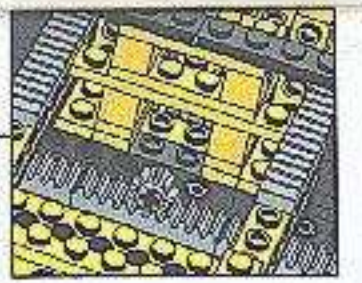

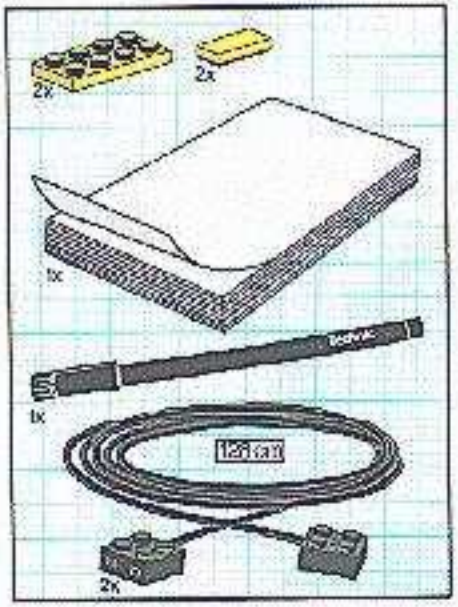
2x
2x
1x
Technic
1x
126 cm
2x

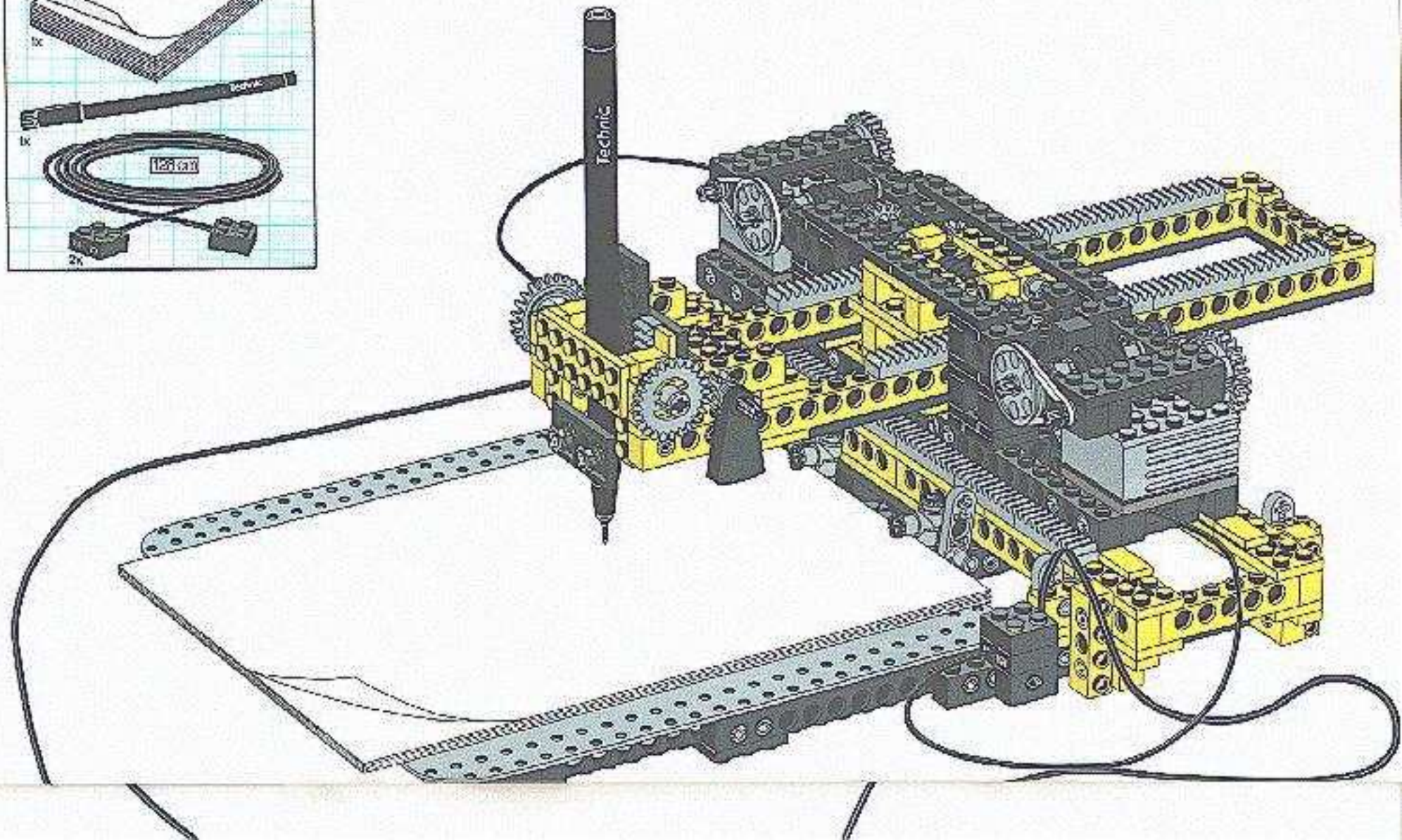
Technic

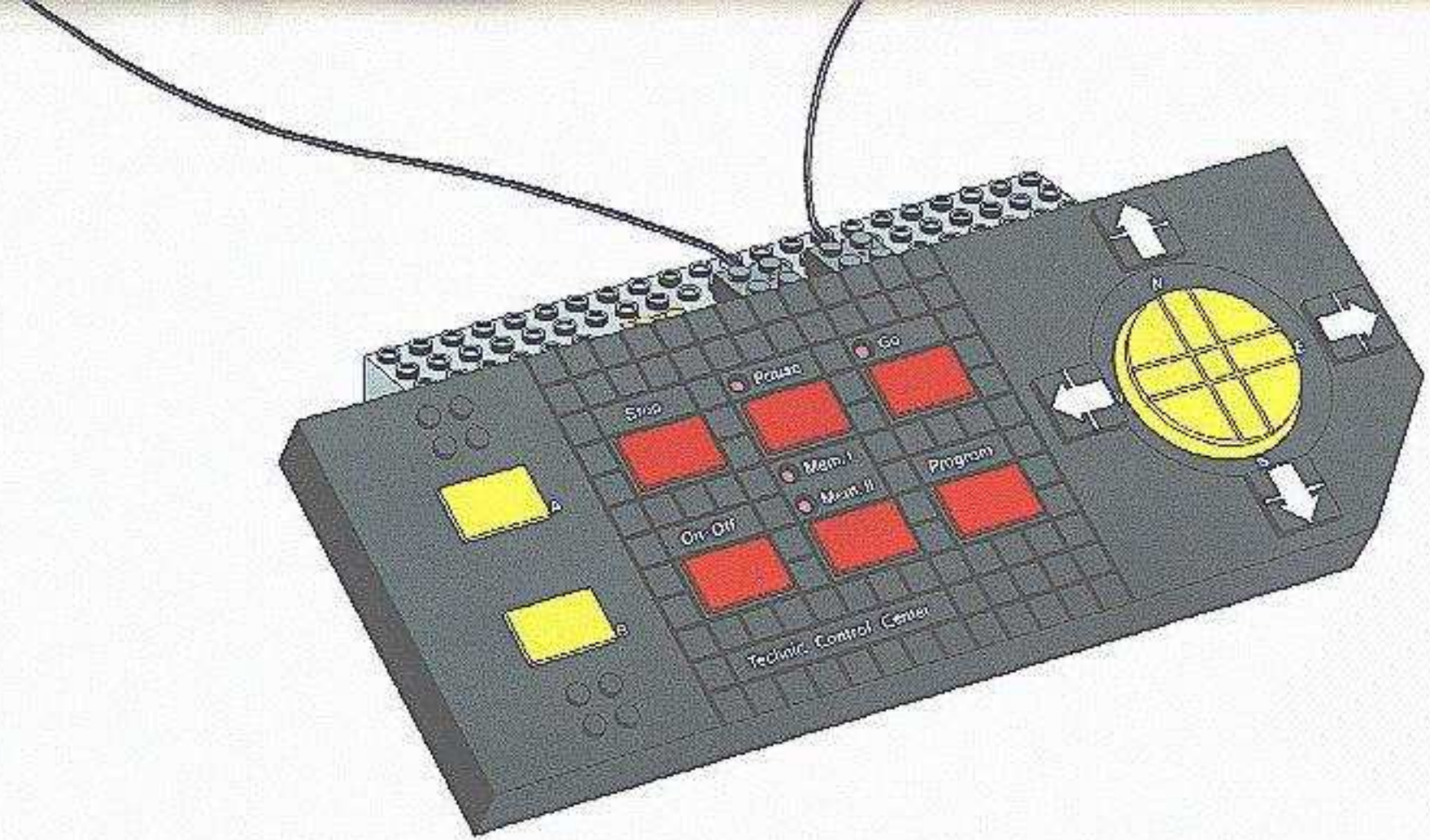
Stop
Pause
Go
Mem. I
Mem. II
Program
On-Off
A
B
N
E
S
W
Technic Control Center

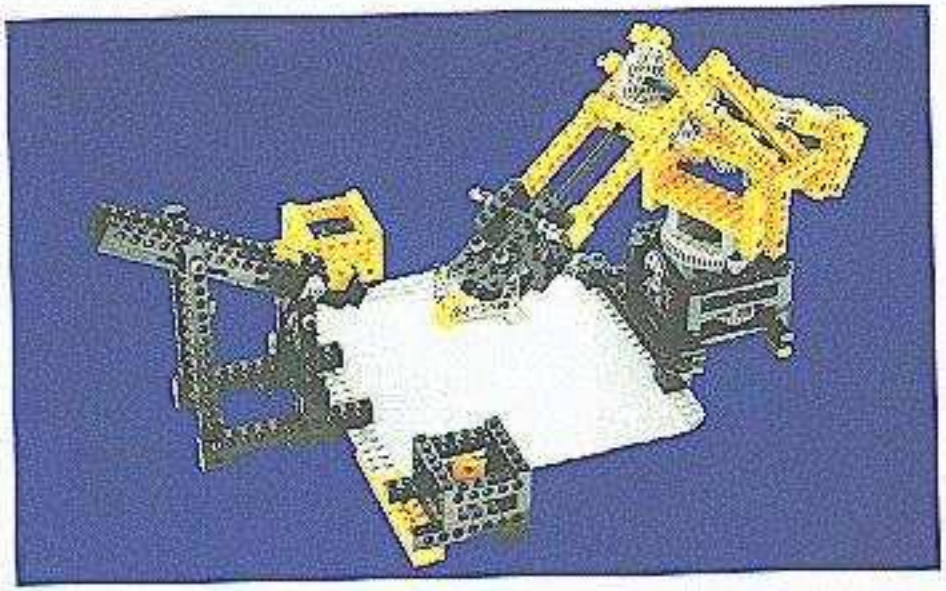

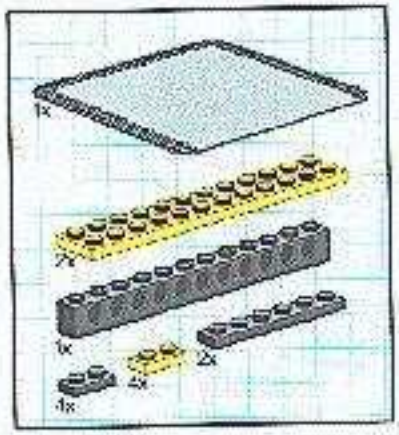

1

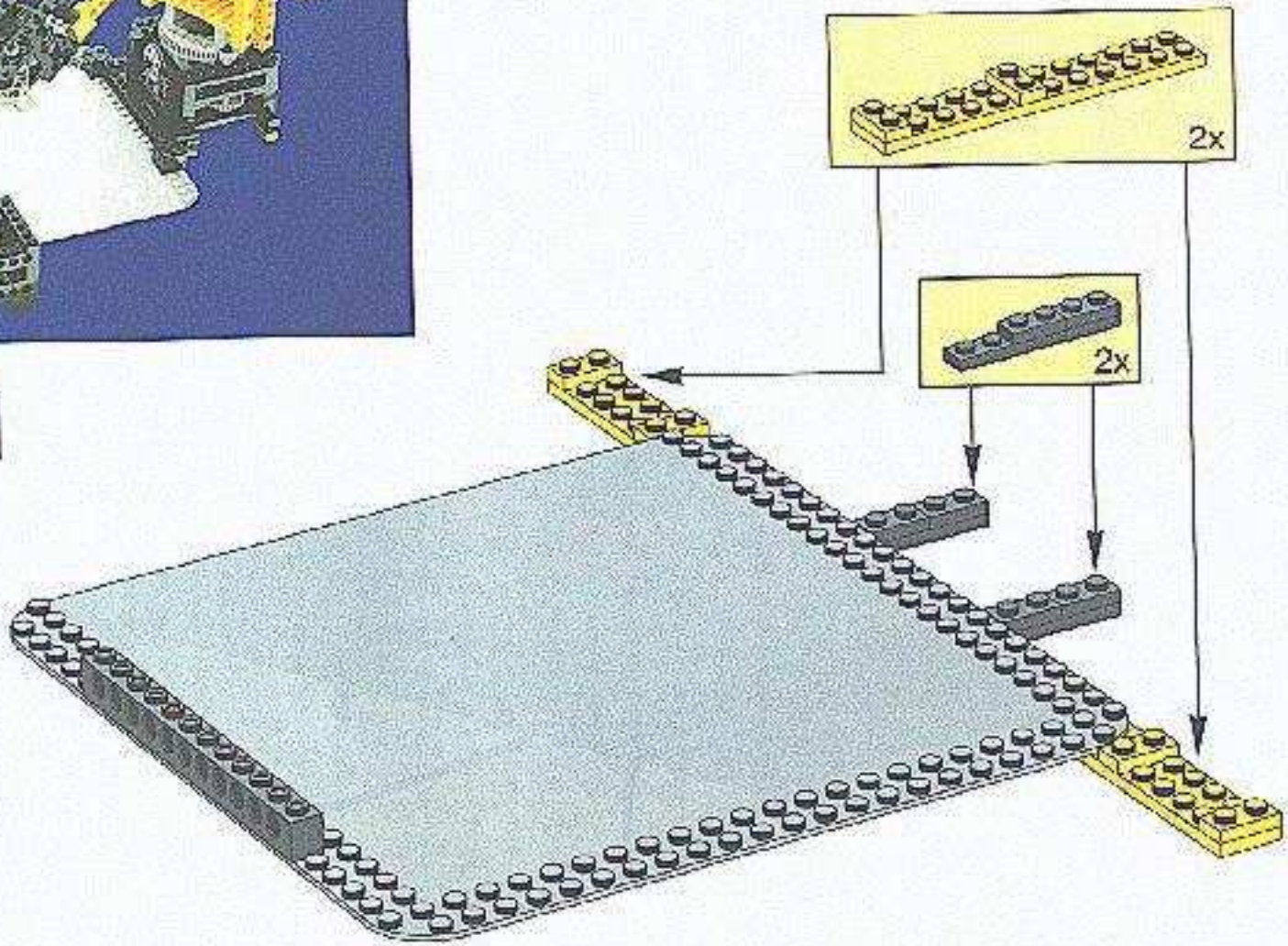

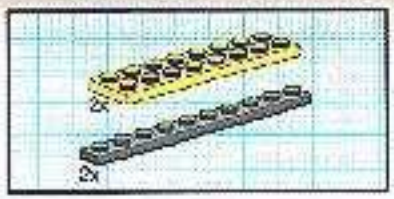

2

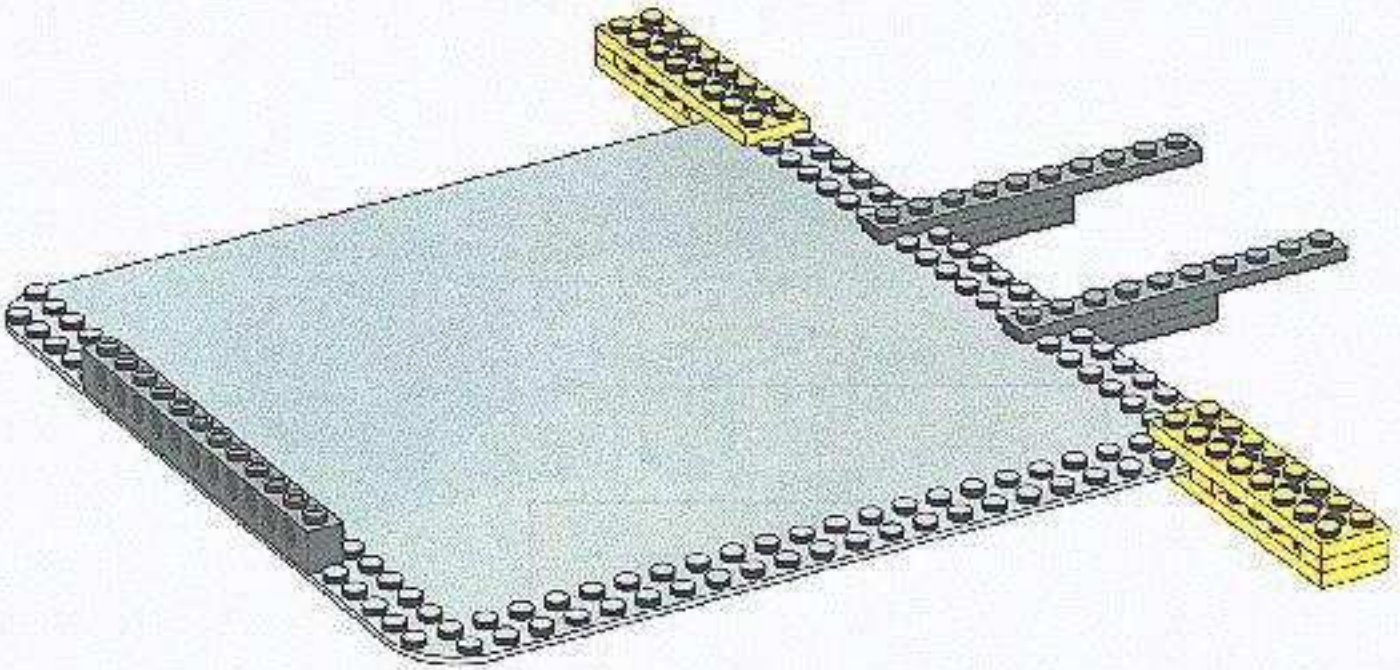

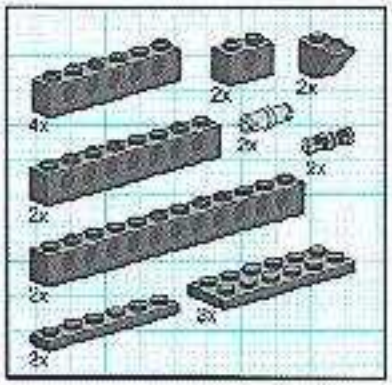

3

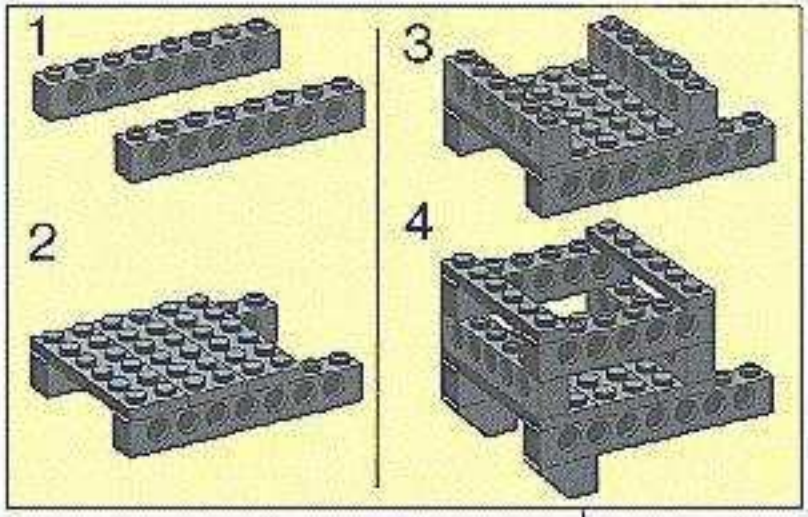

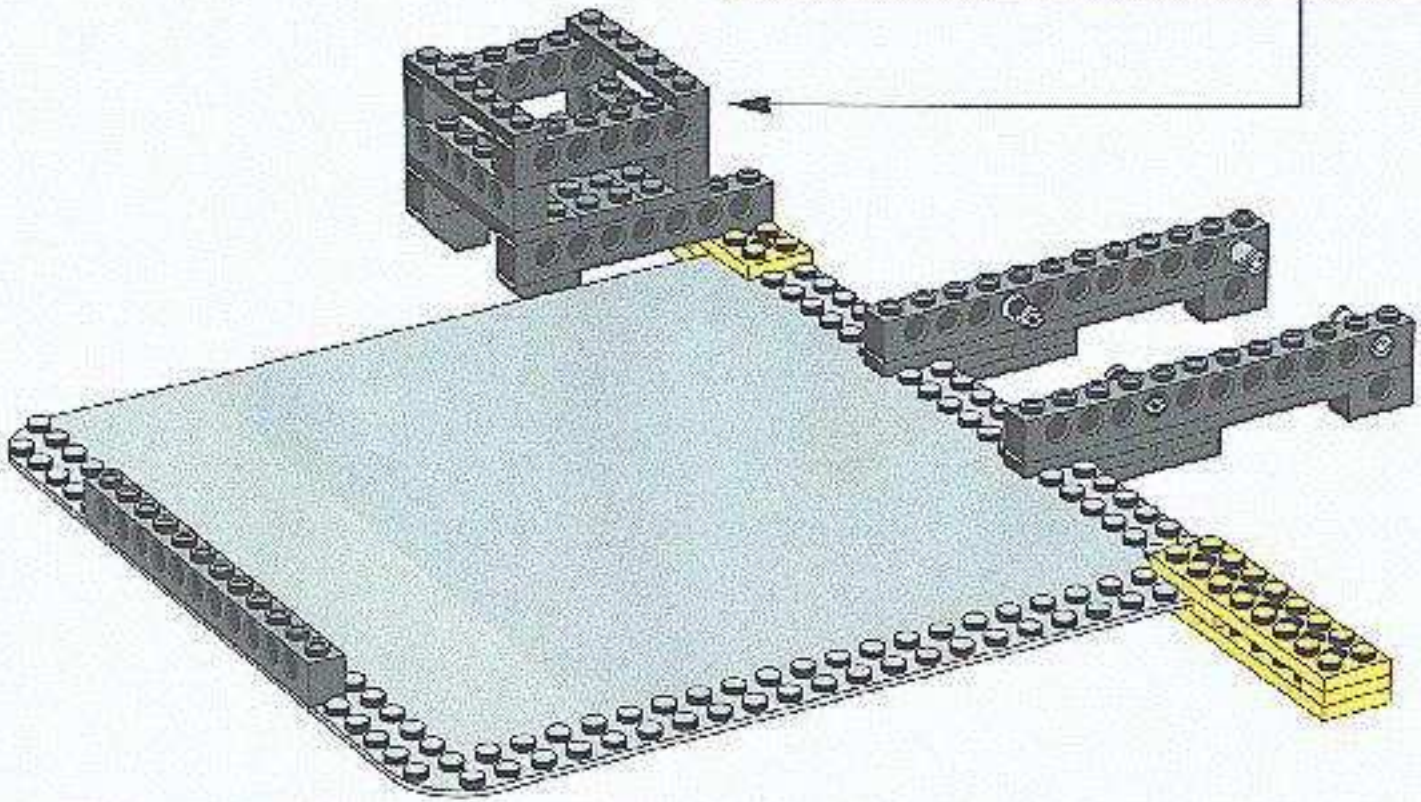

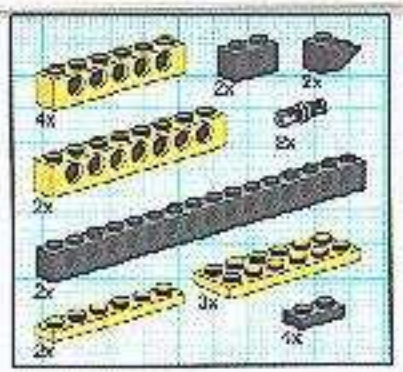

4

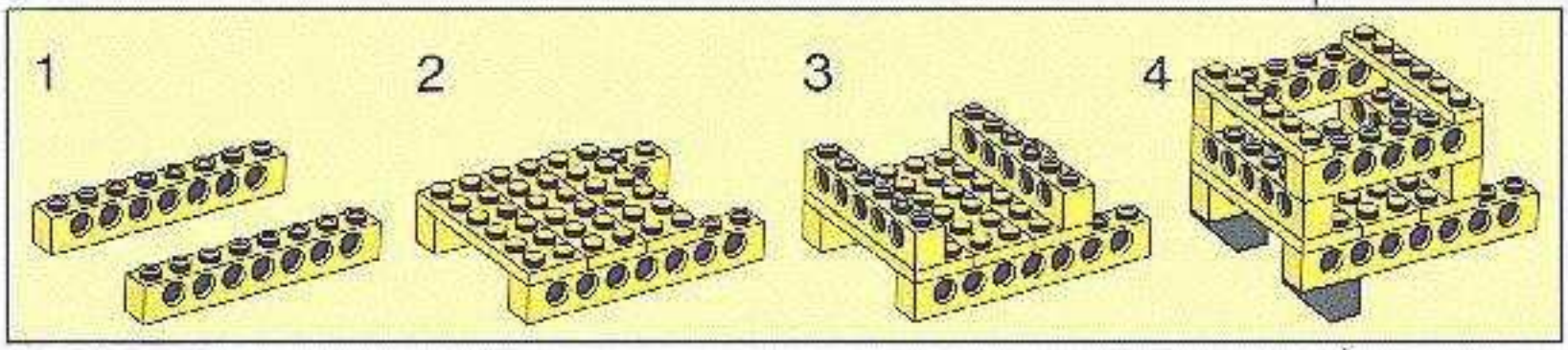

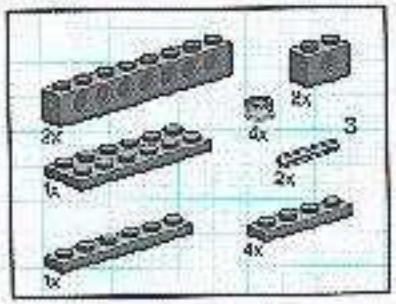

5

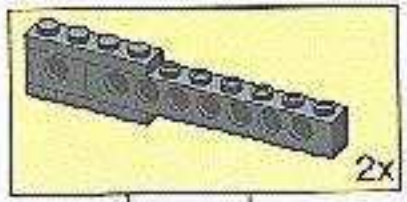

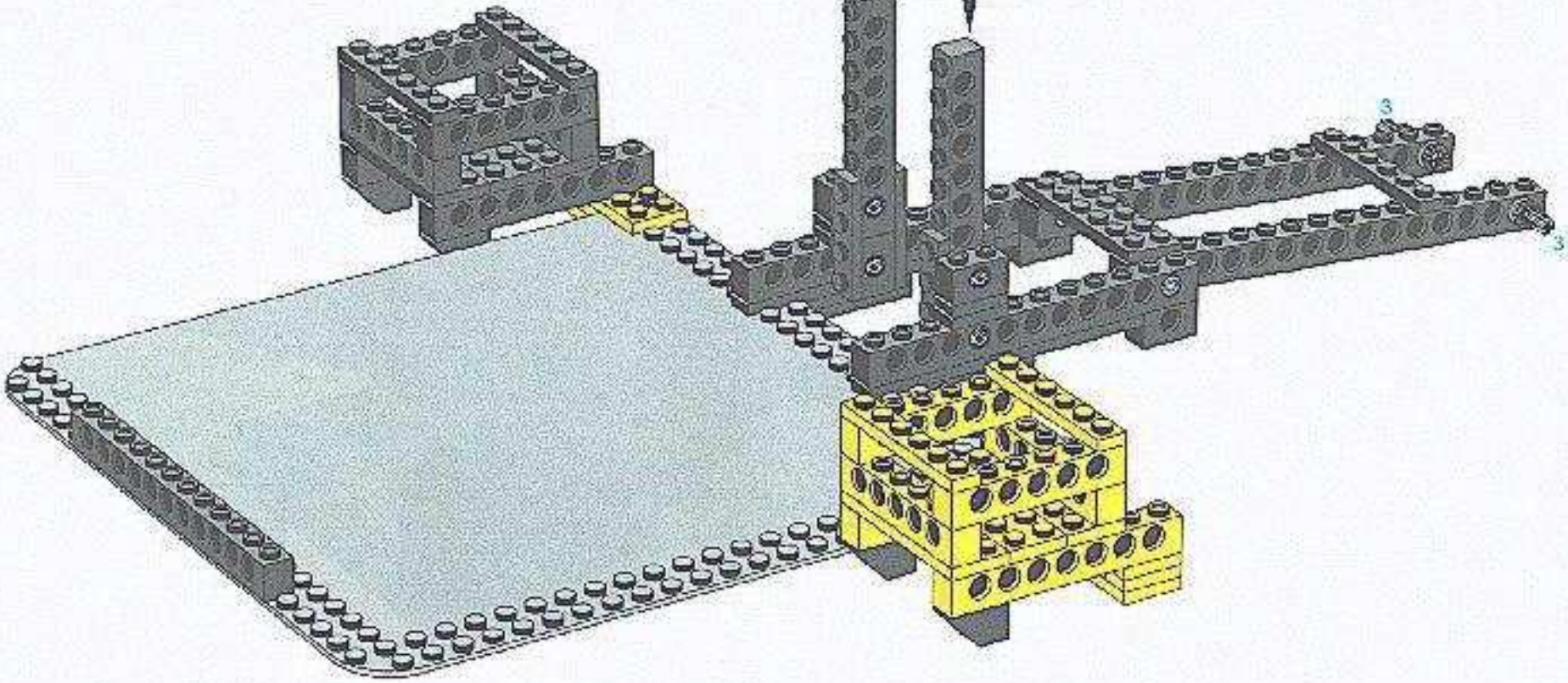

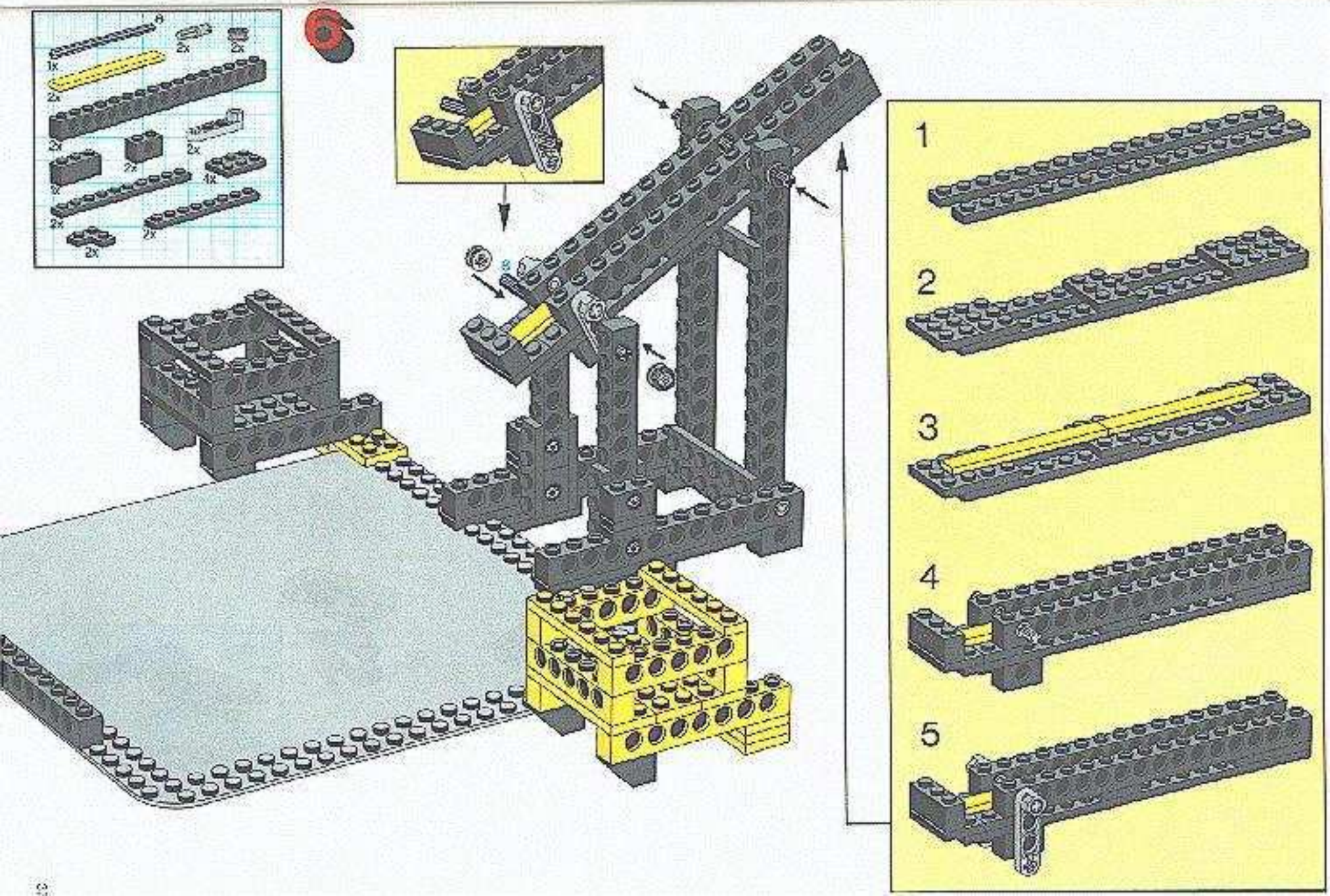
1x
2x
2x
2x
2x
2x
2x
2x
2x
2x
2x
2x
1x
2x
1
2
3
4
5

2x
2x
4x

7

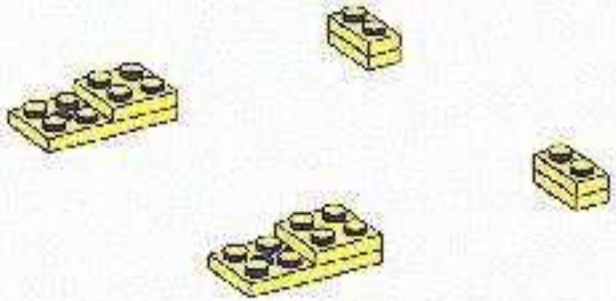

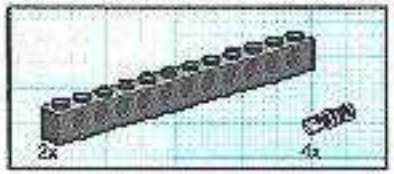
2x
4x

8

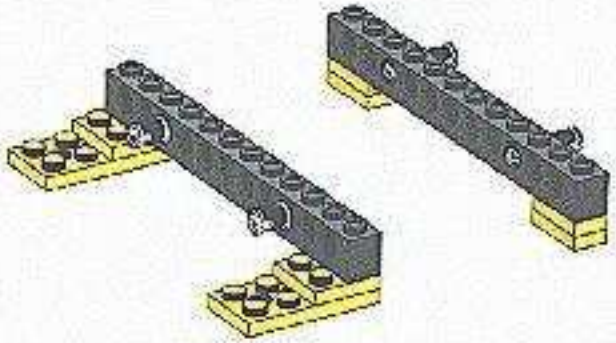

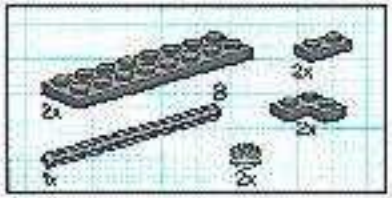
2x
8
2x
2x
1x
2x

9

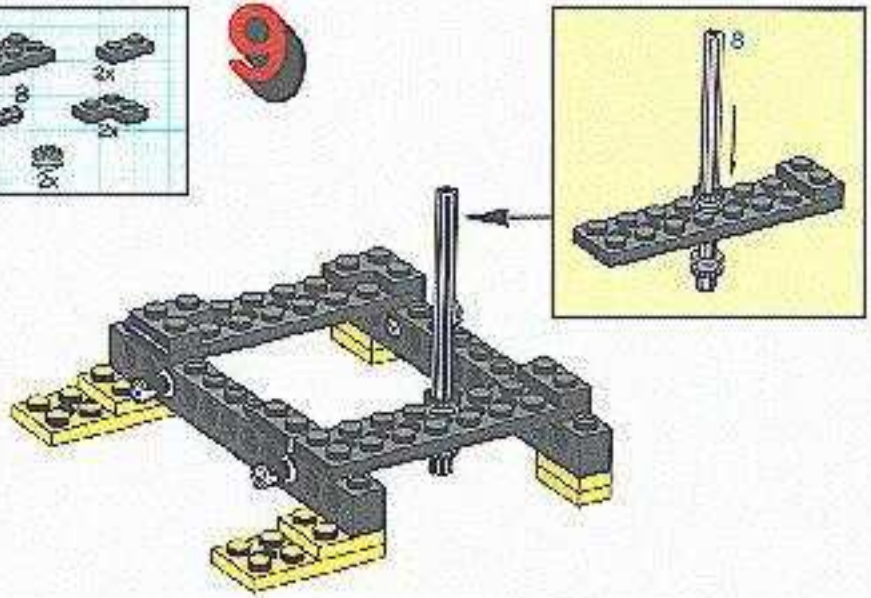
8

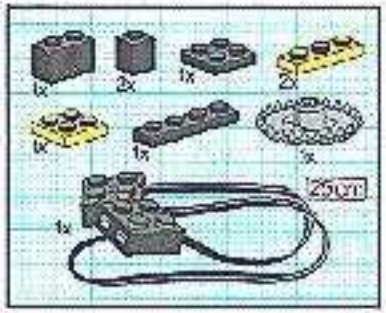
1x
2x
1x
2x
1x
1x
1x
25cm
1x

10

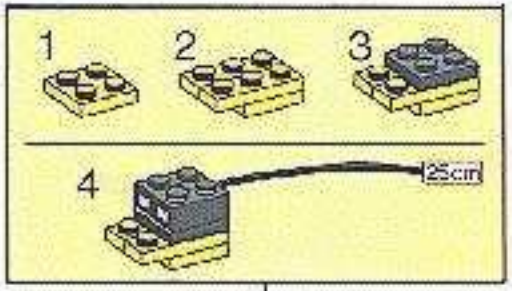
1
2
3
4
25cm

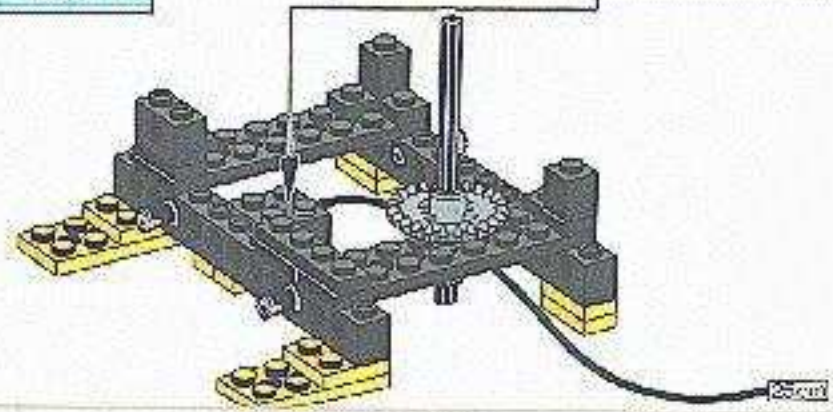
25cm

11

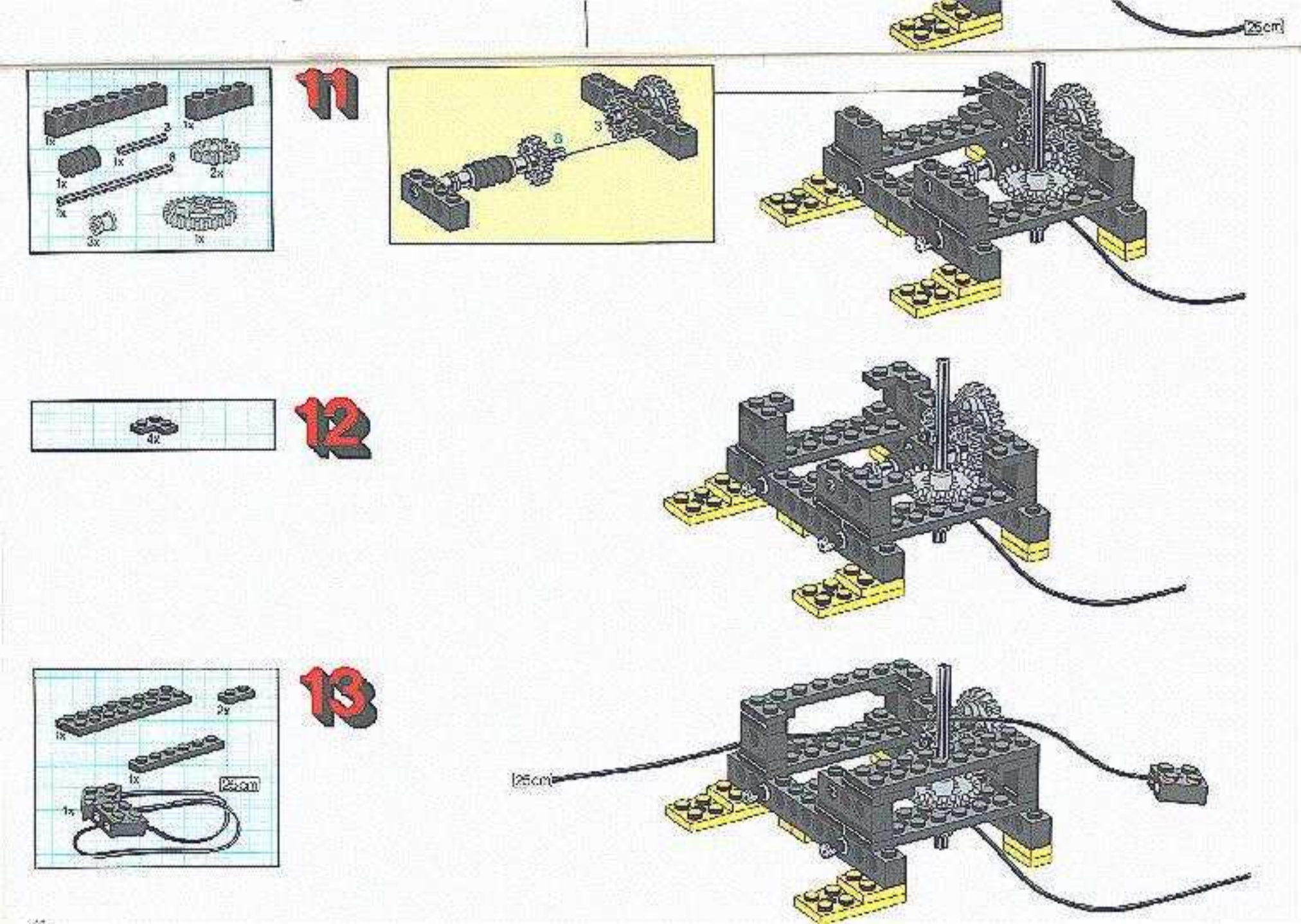
11
12
13
25cm

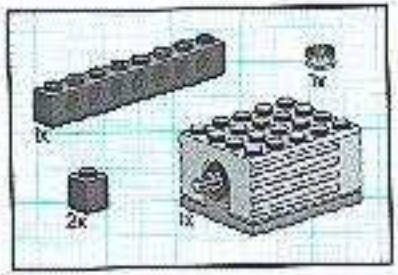

14

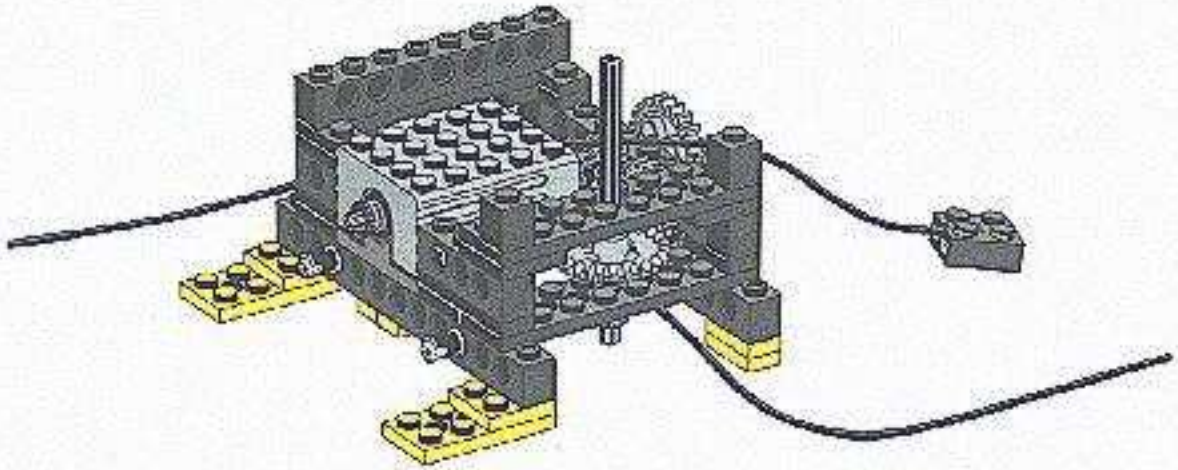

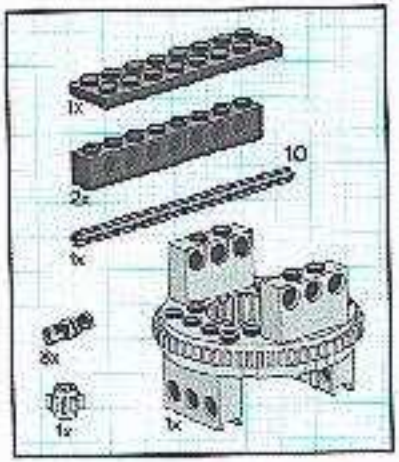

15

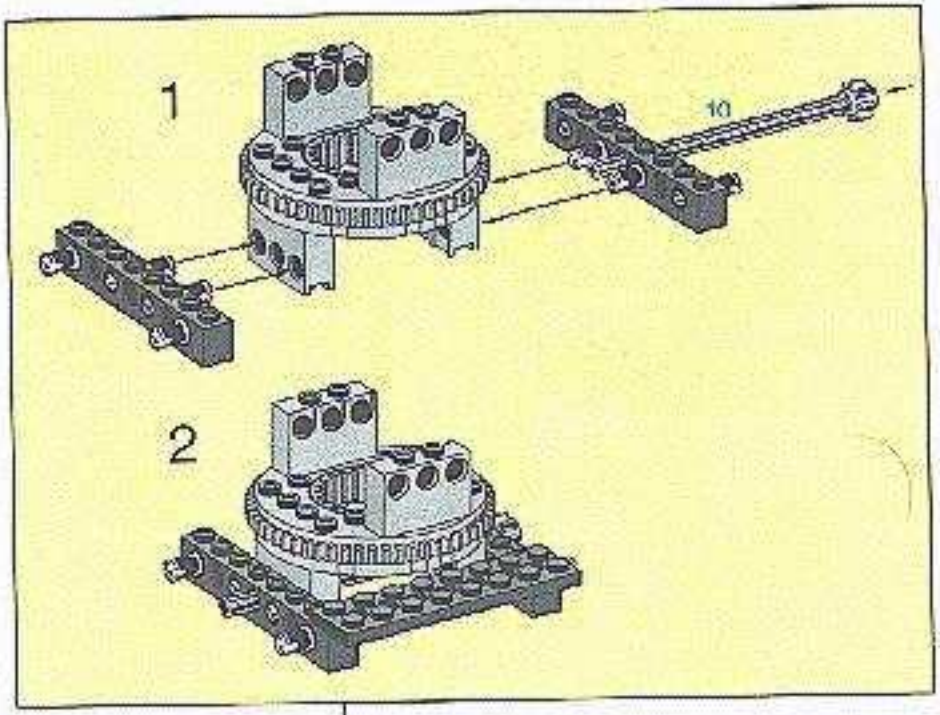

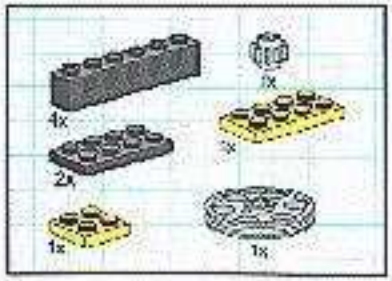

16

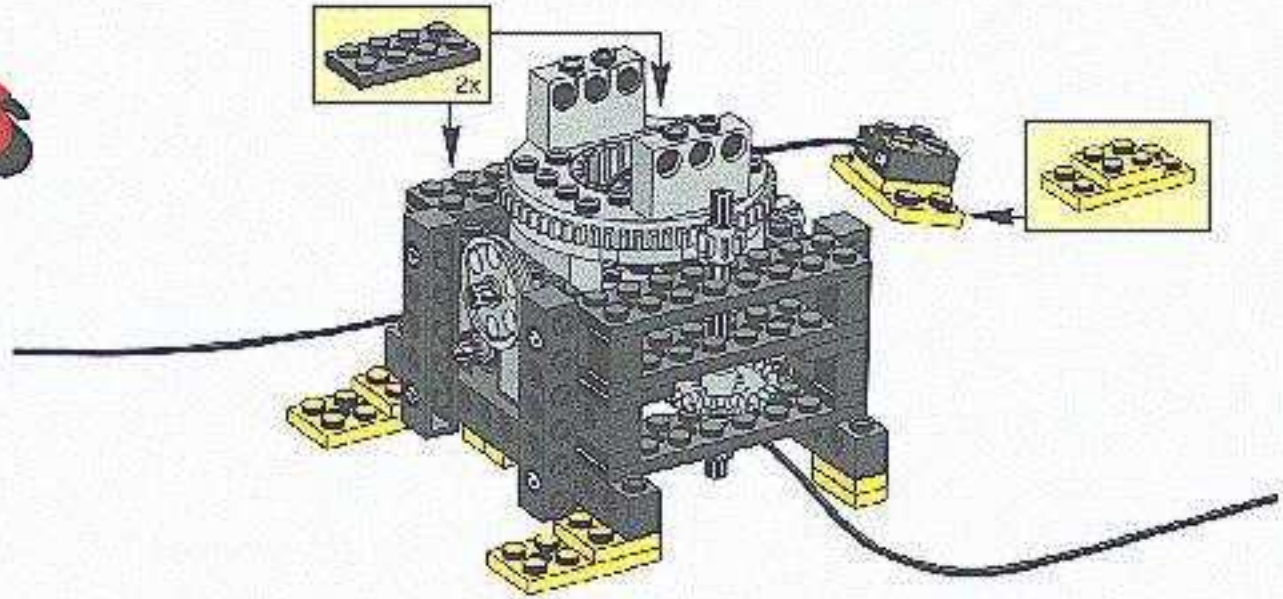

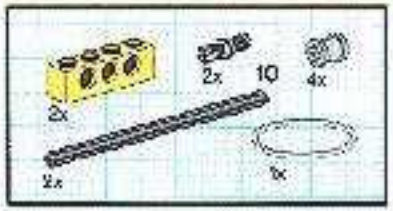

17

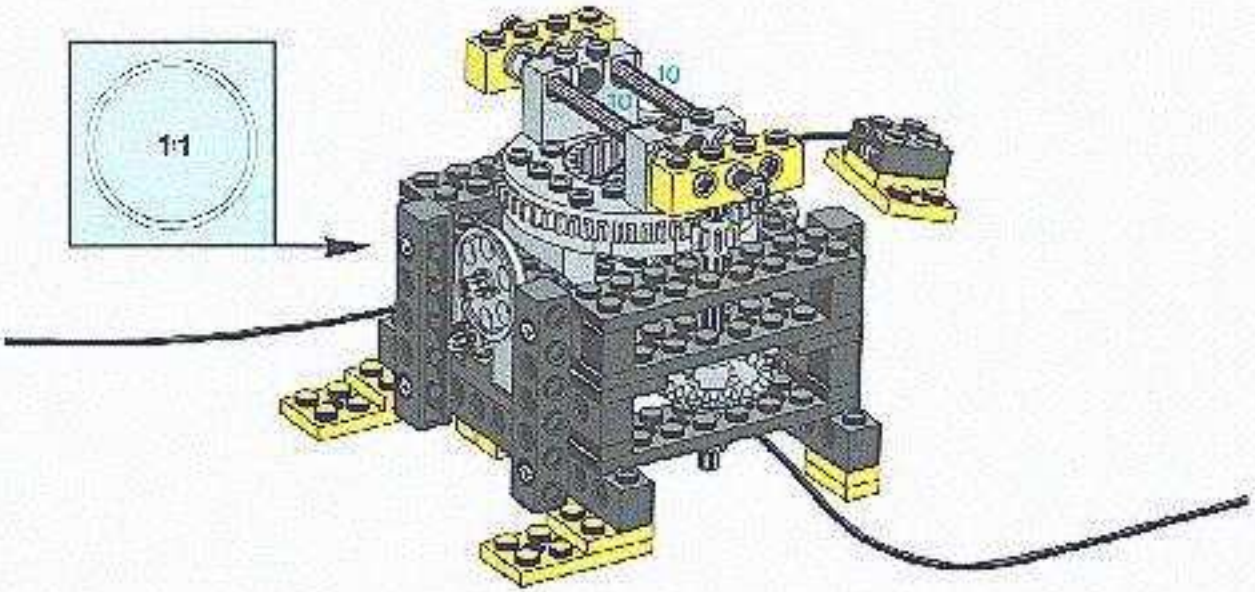

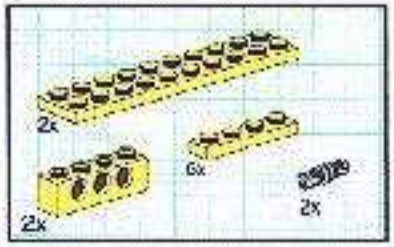

18

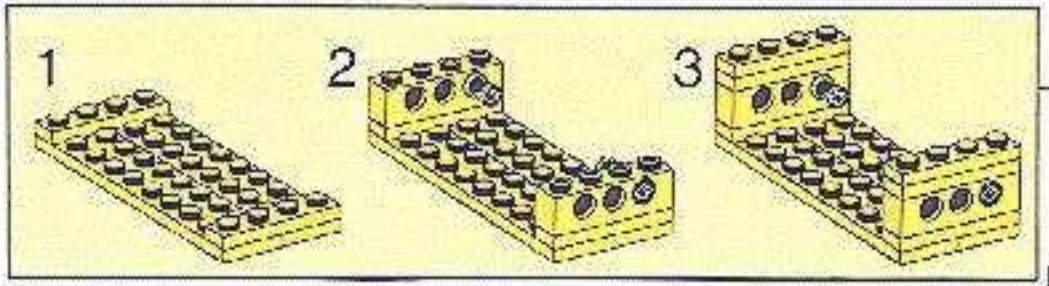

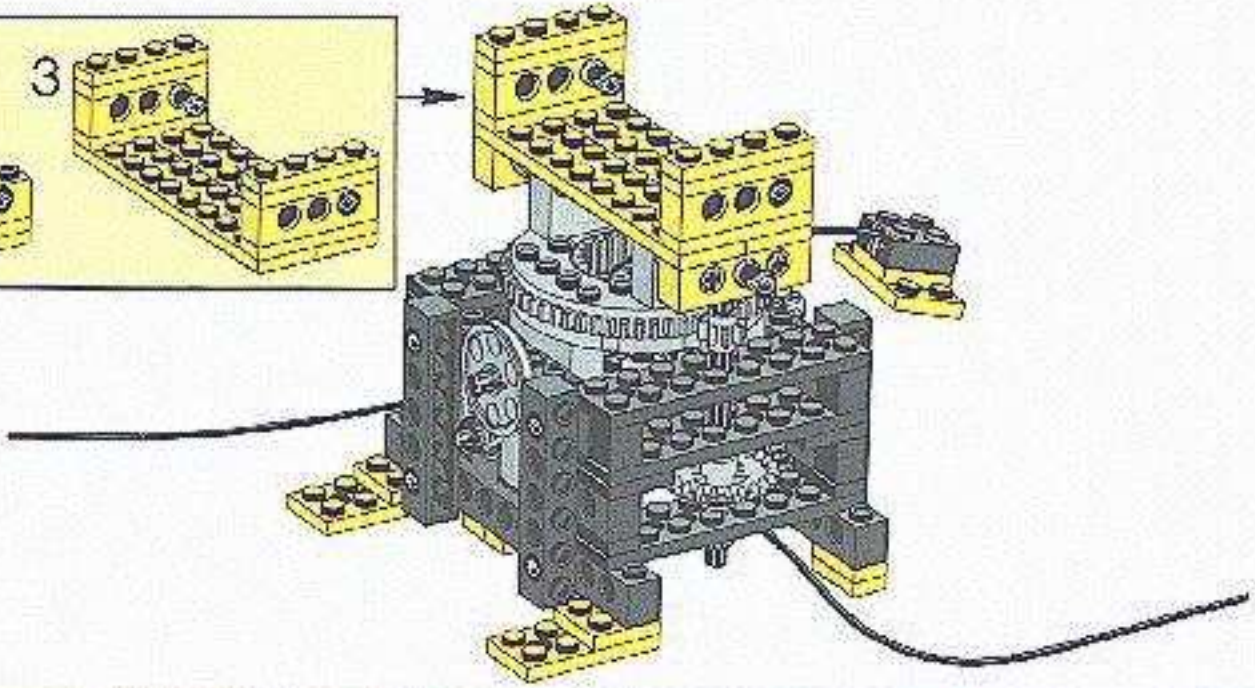

19

20

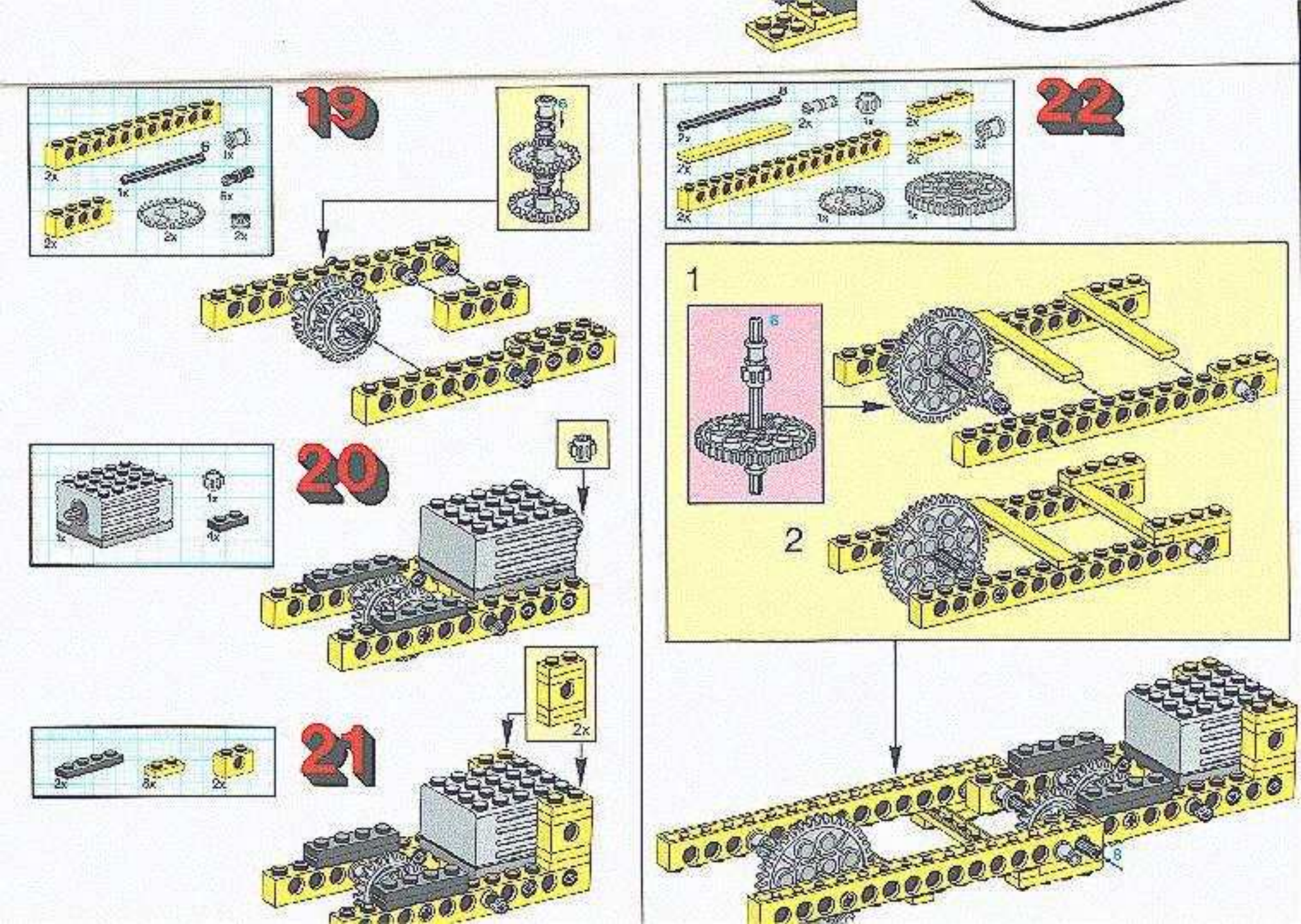
19
20
21
22
1
2

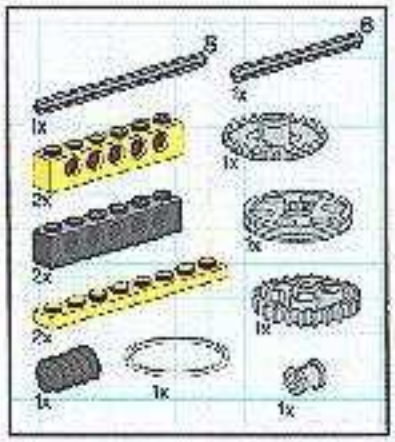

23

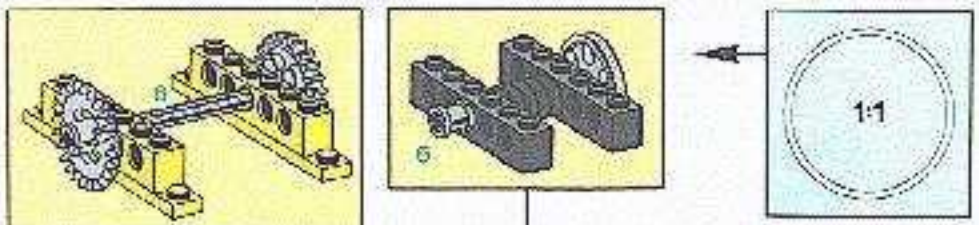

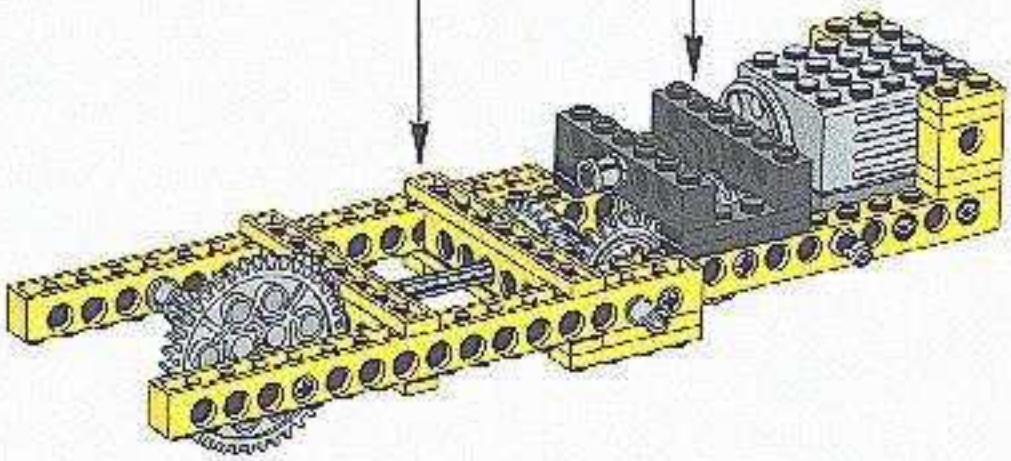

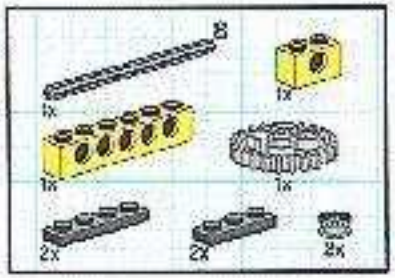

24

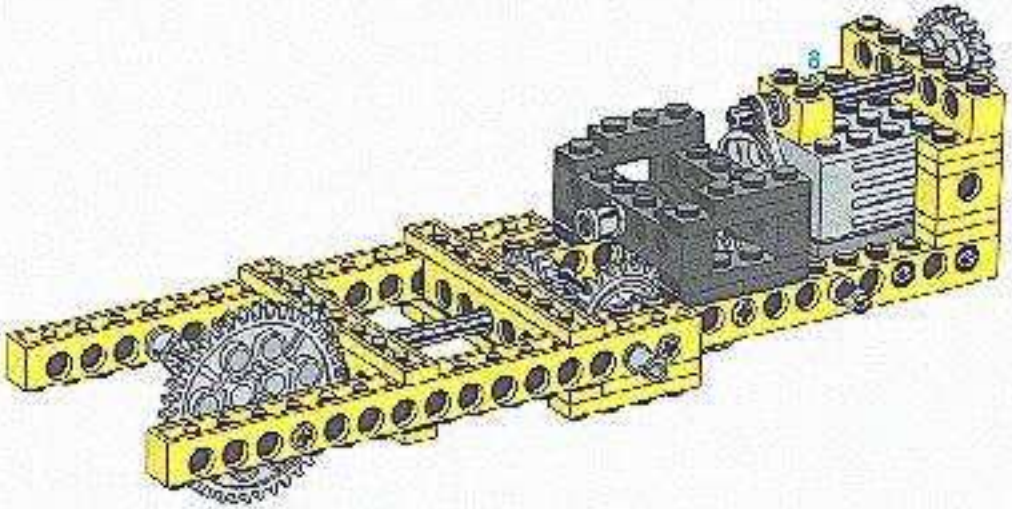

25

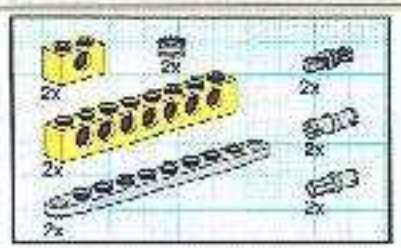

25

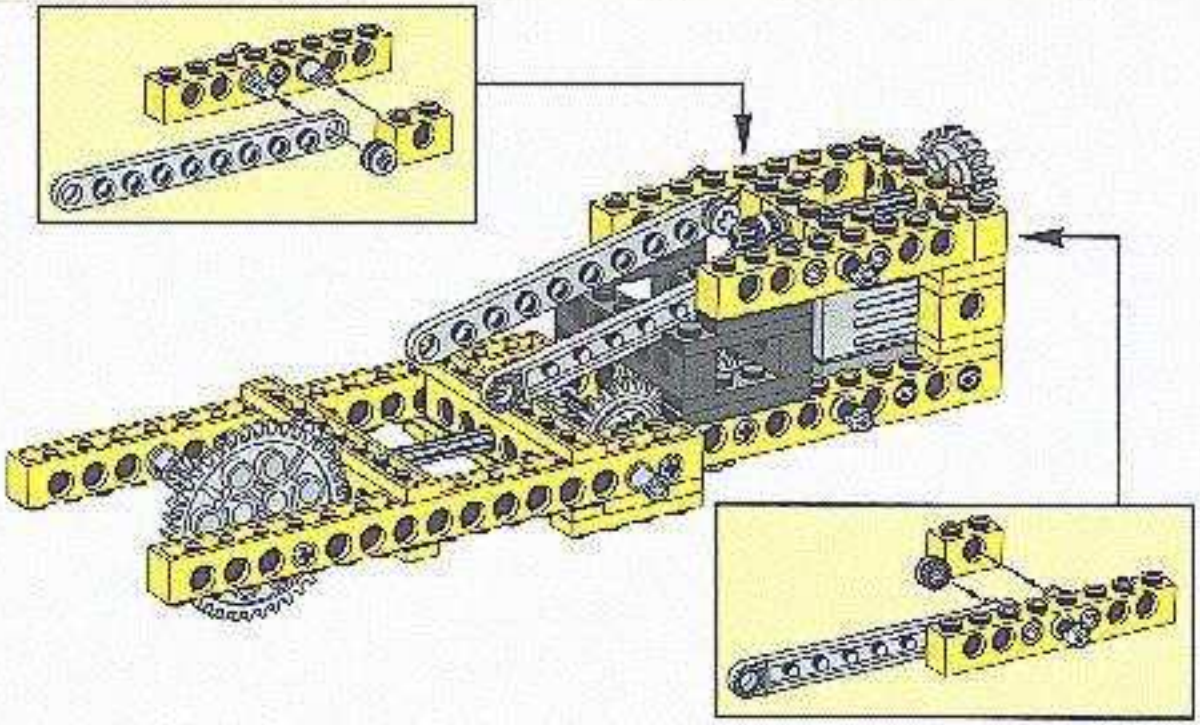

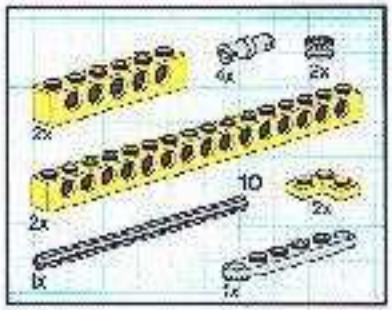

26

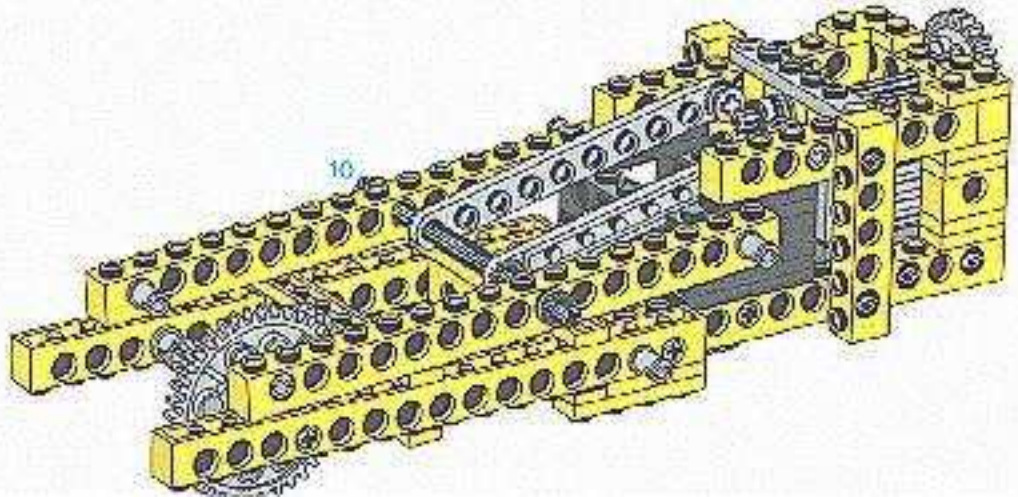

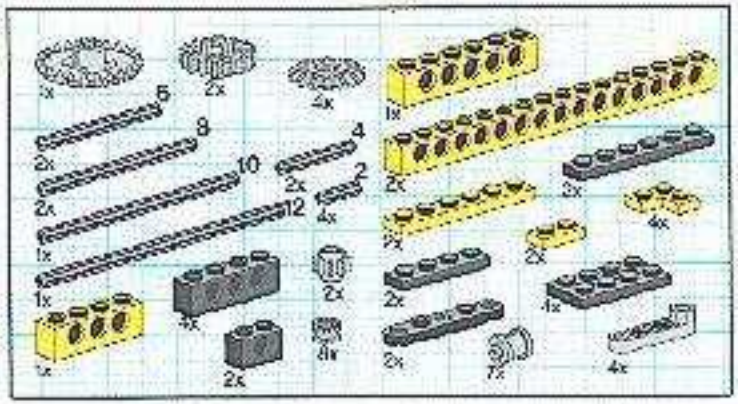

1

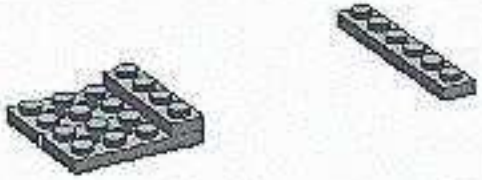

2

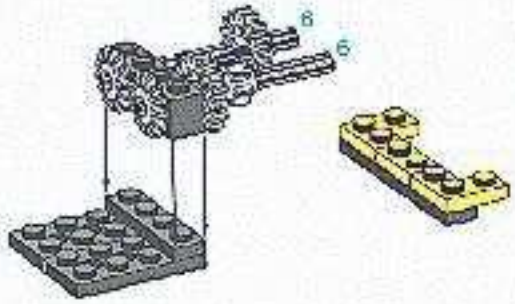

3

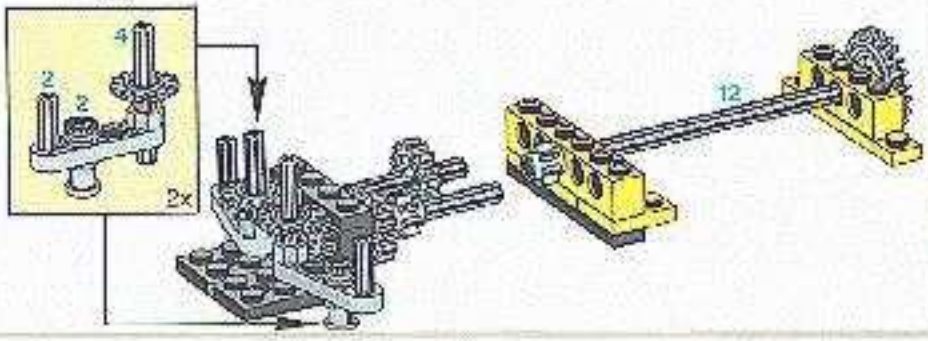

4

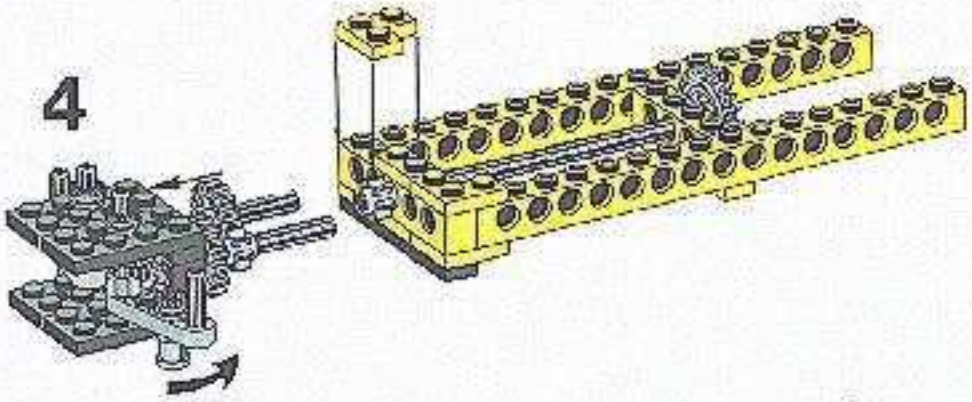

5

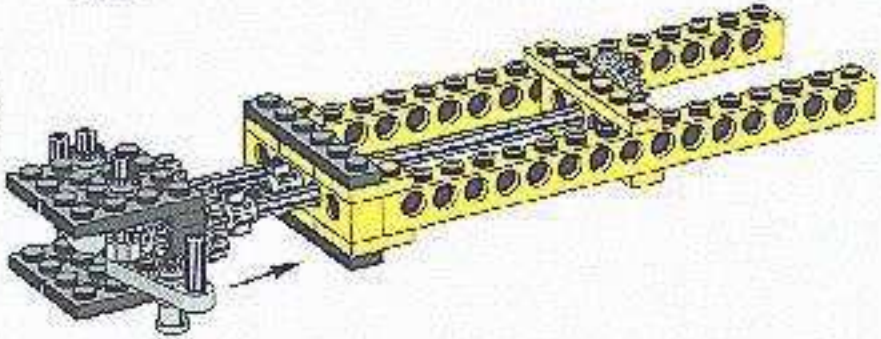

6

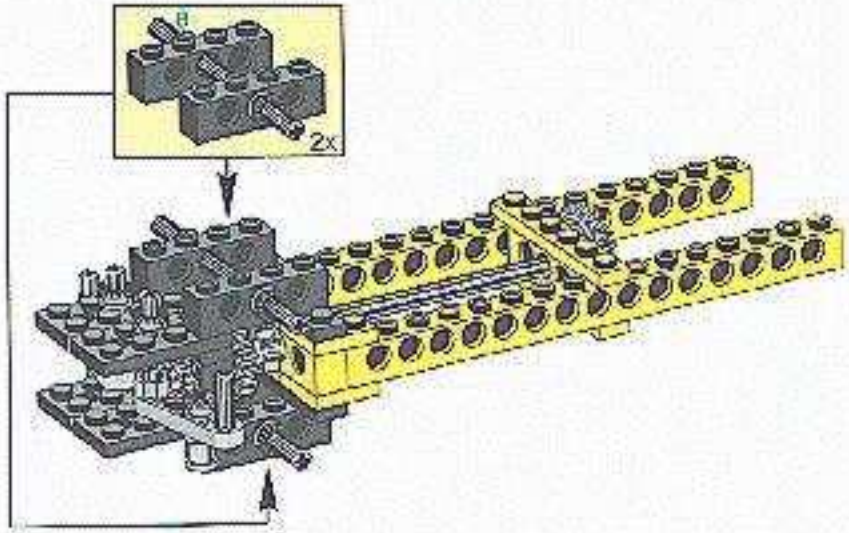

7

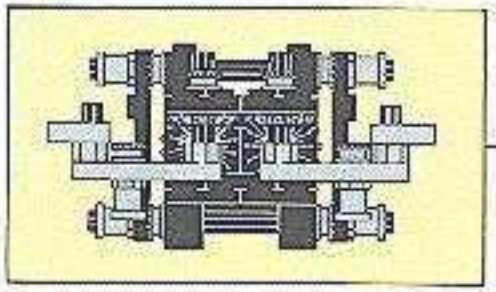

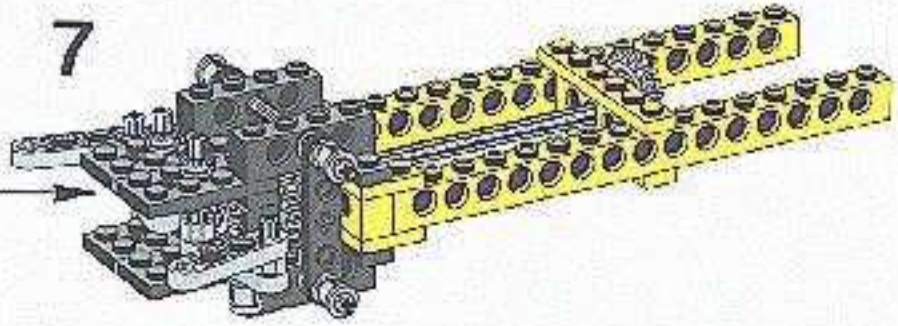

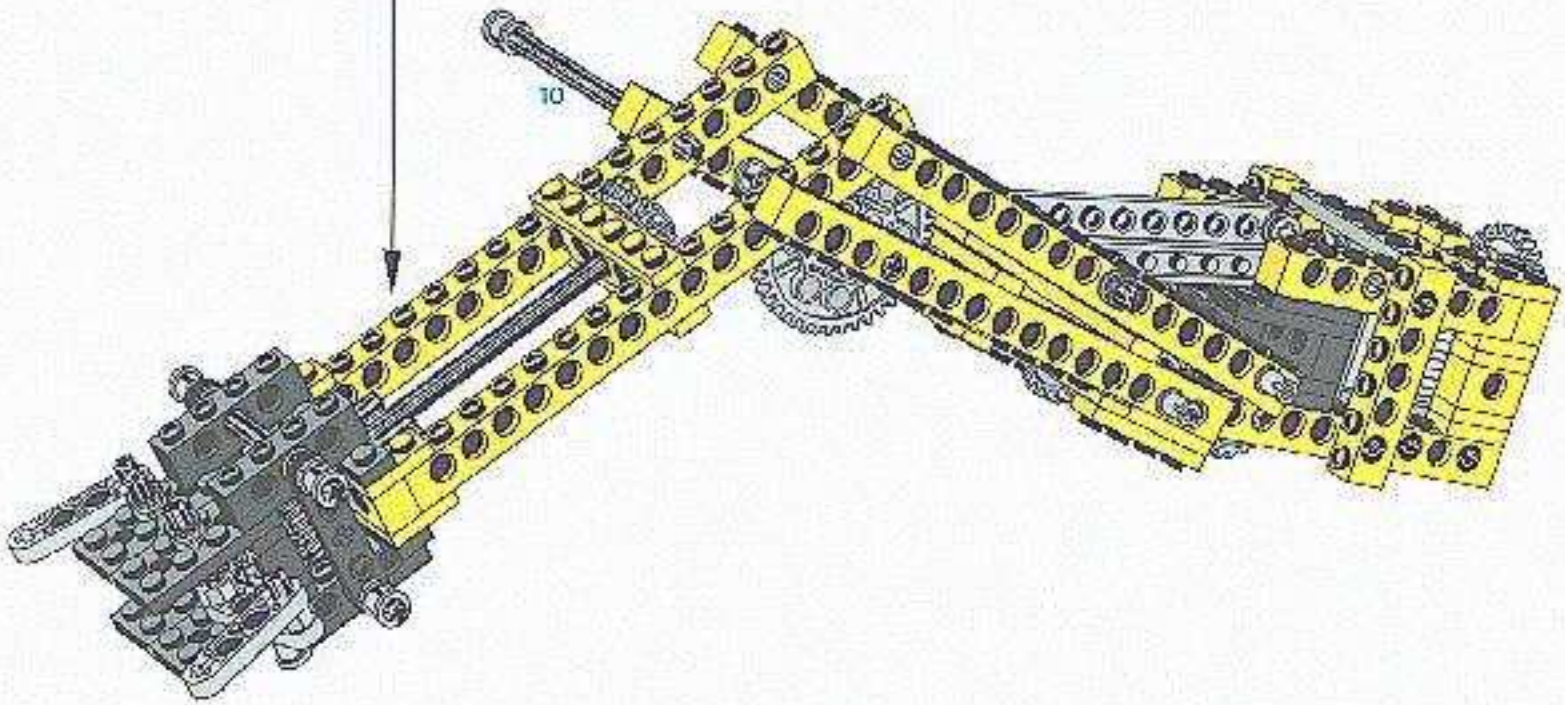

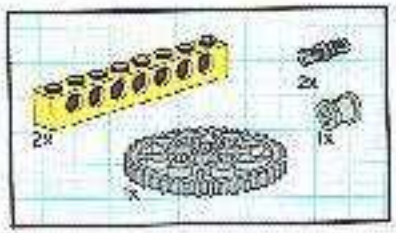

28

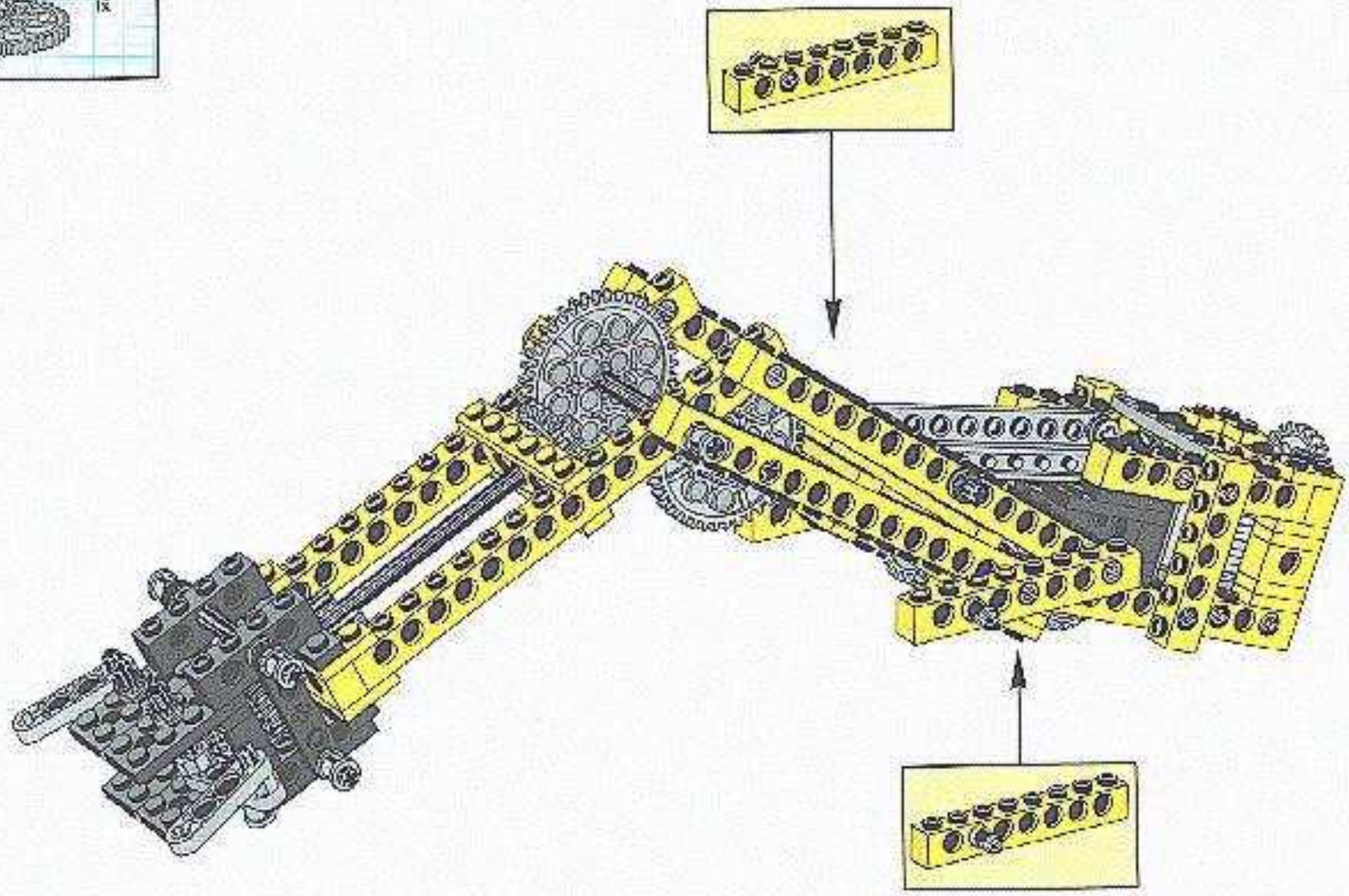

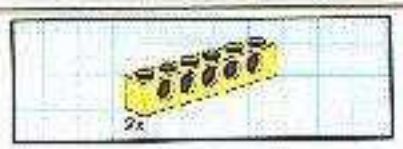

29

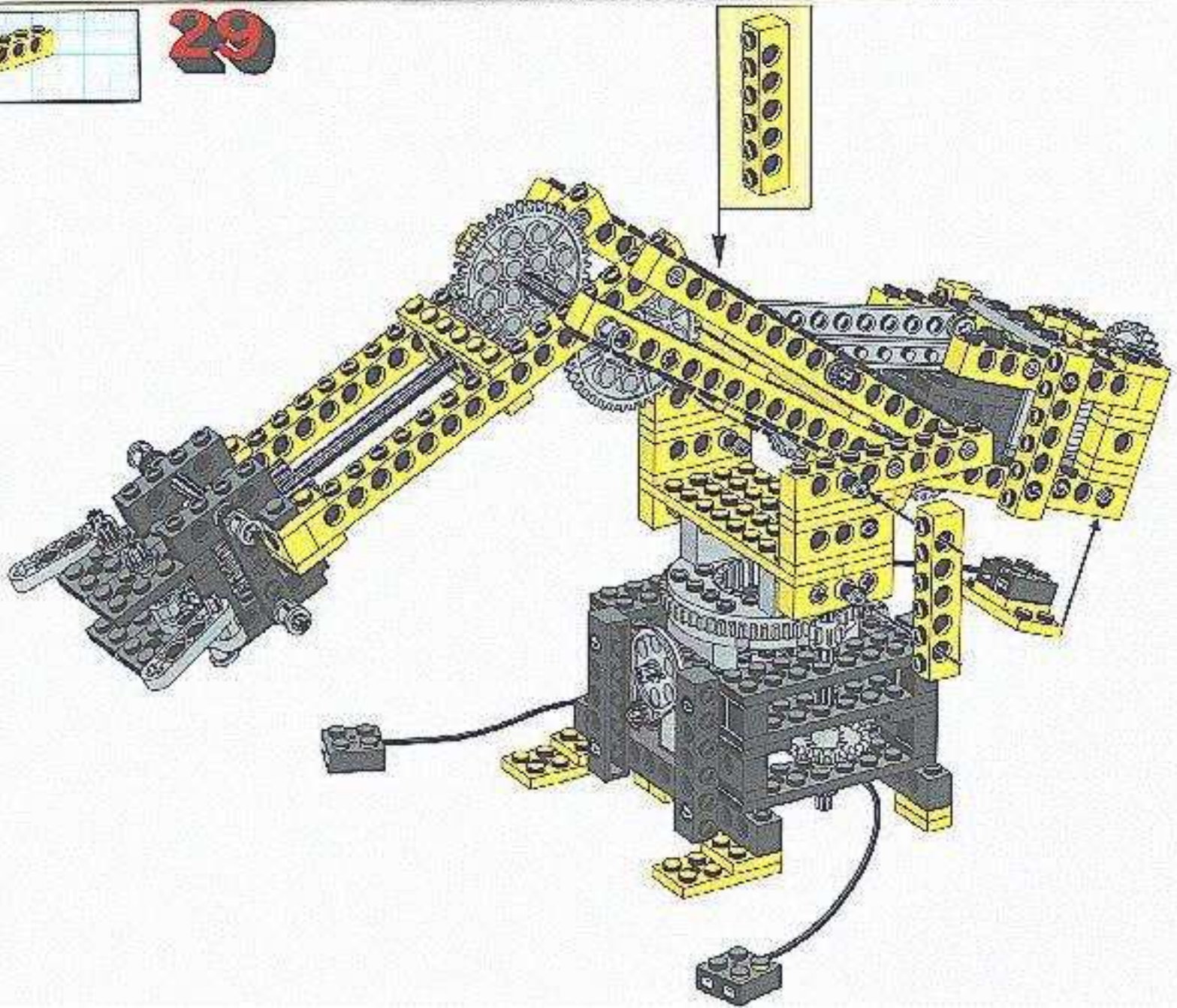

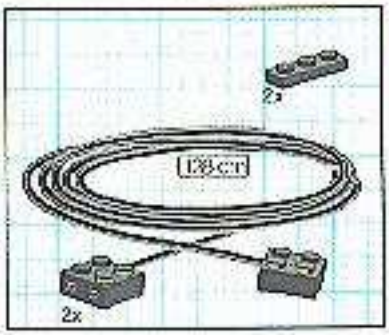

30

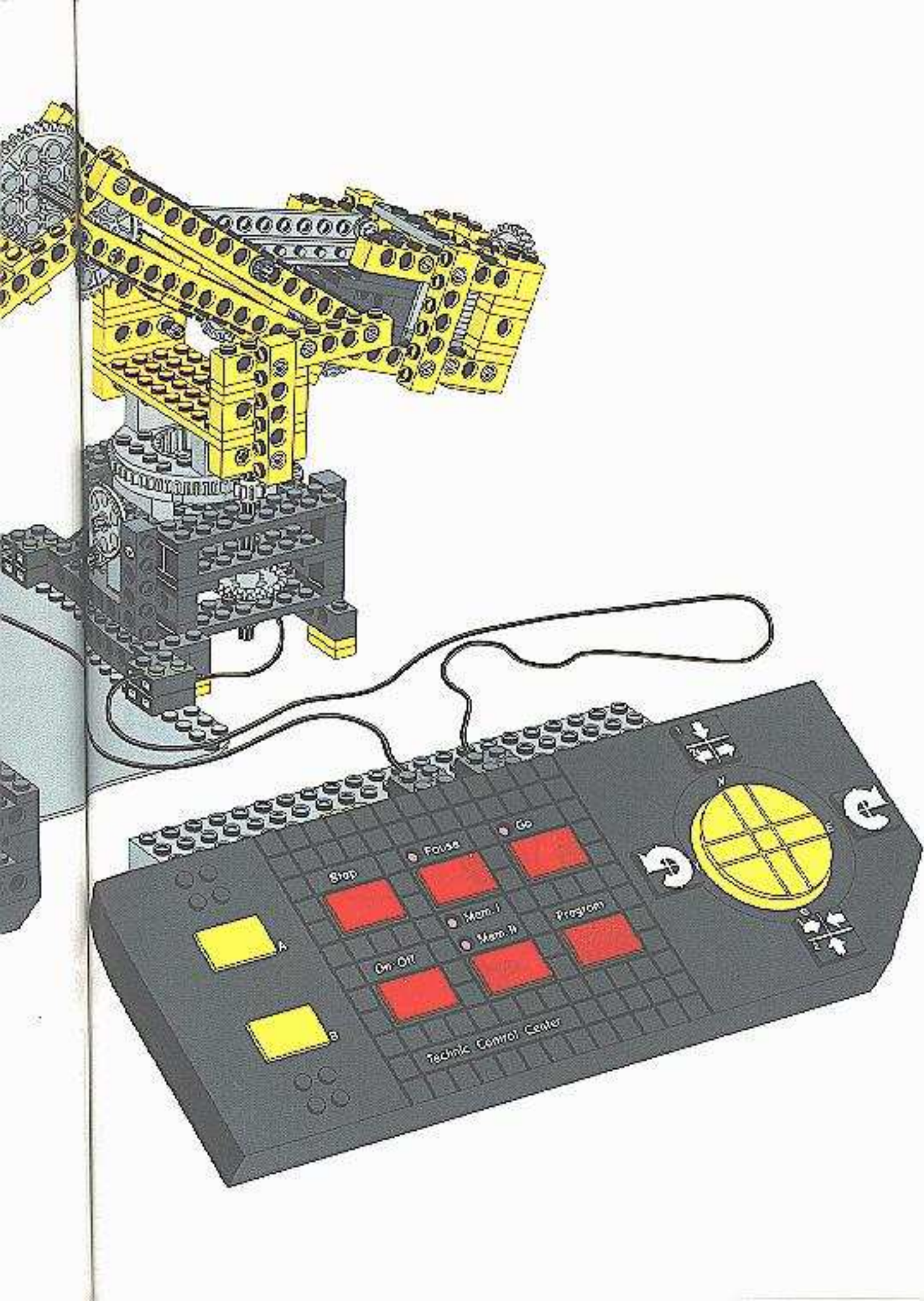
Stop
Pause
Go
Mem. I
Mem. II
Program
On/Off
A
B
Technic Control Center
N
E
S
W

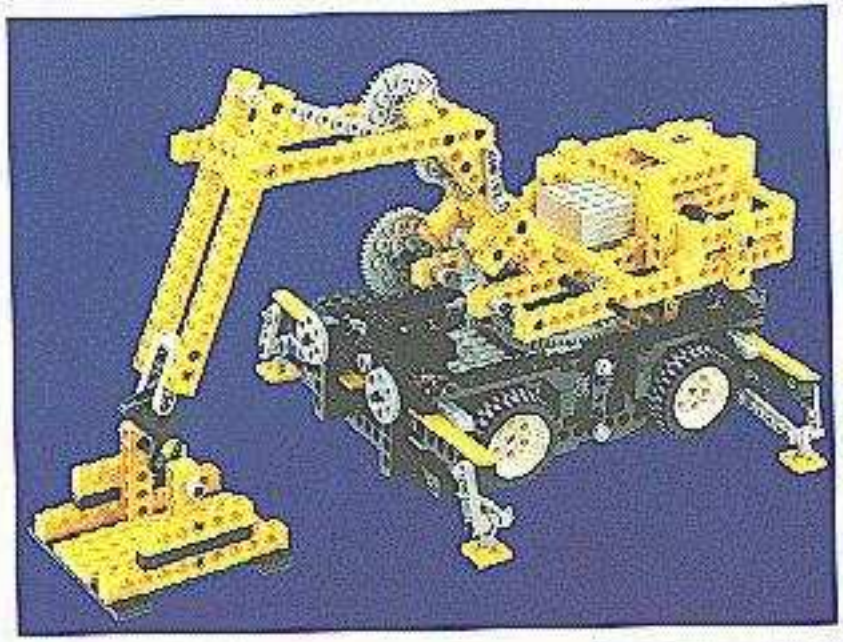

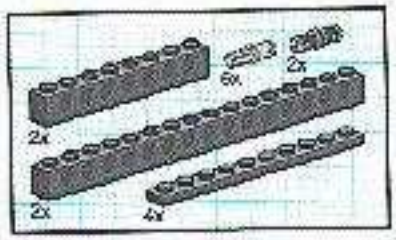

1

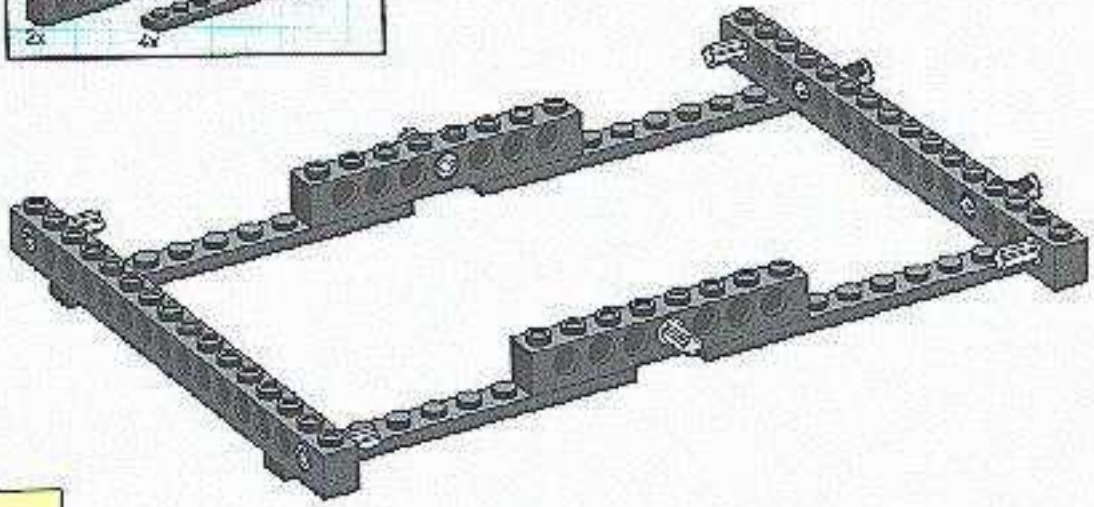

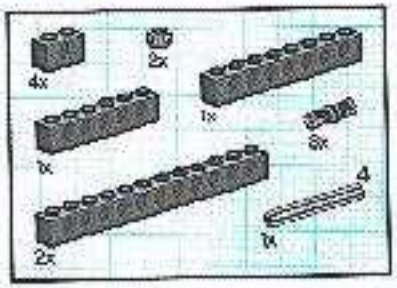

2

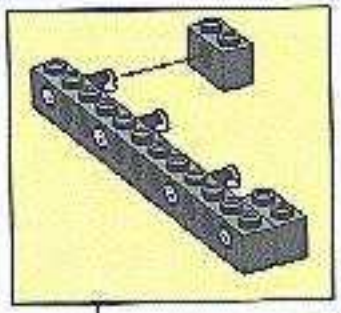

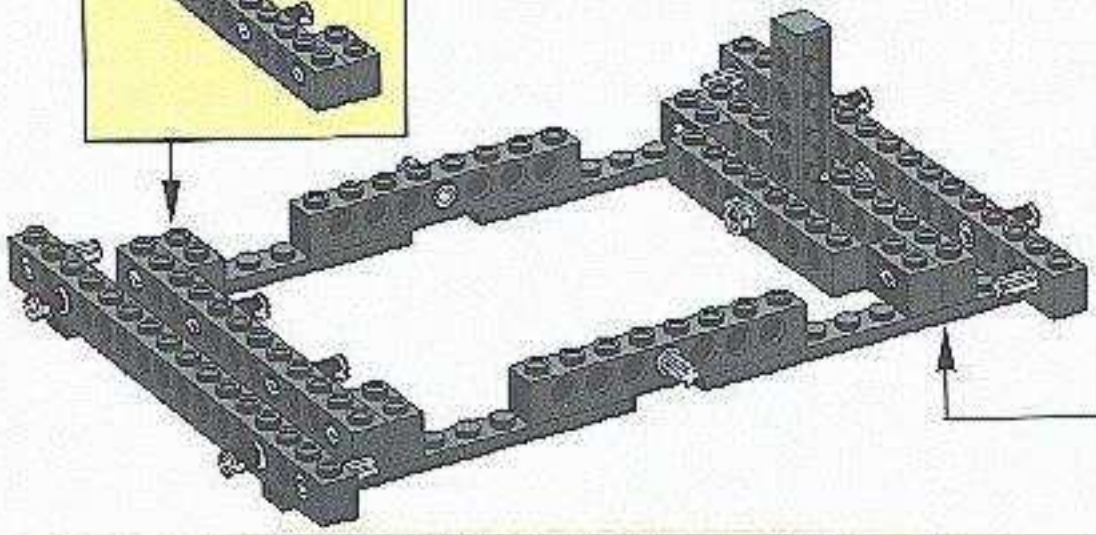

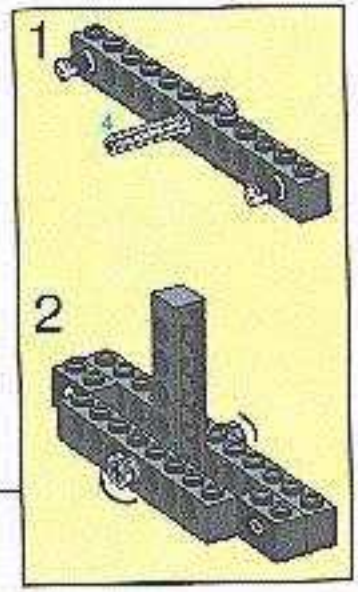

3

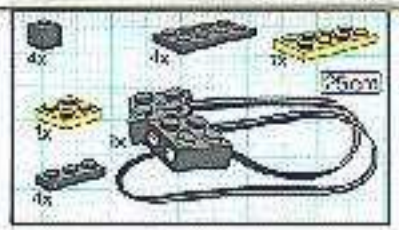

3

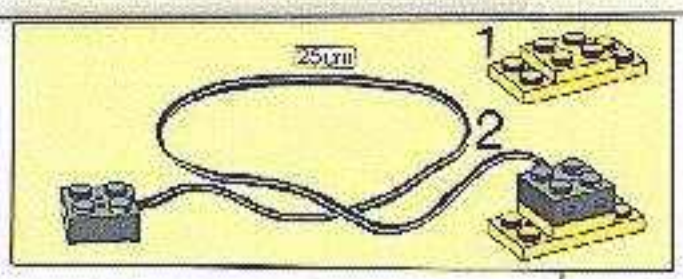

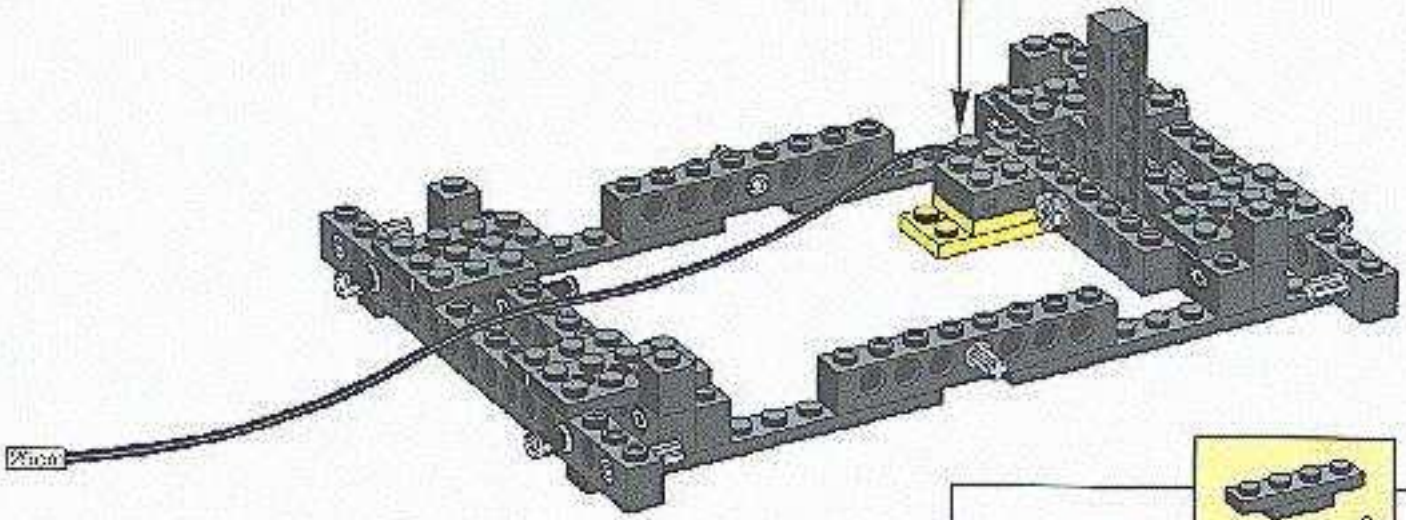

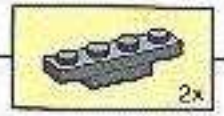

4

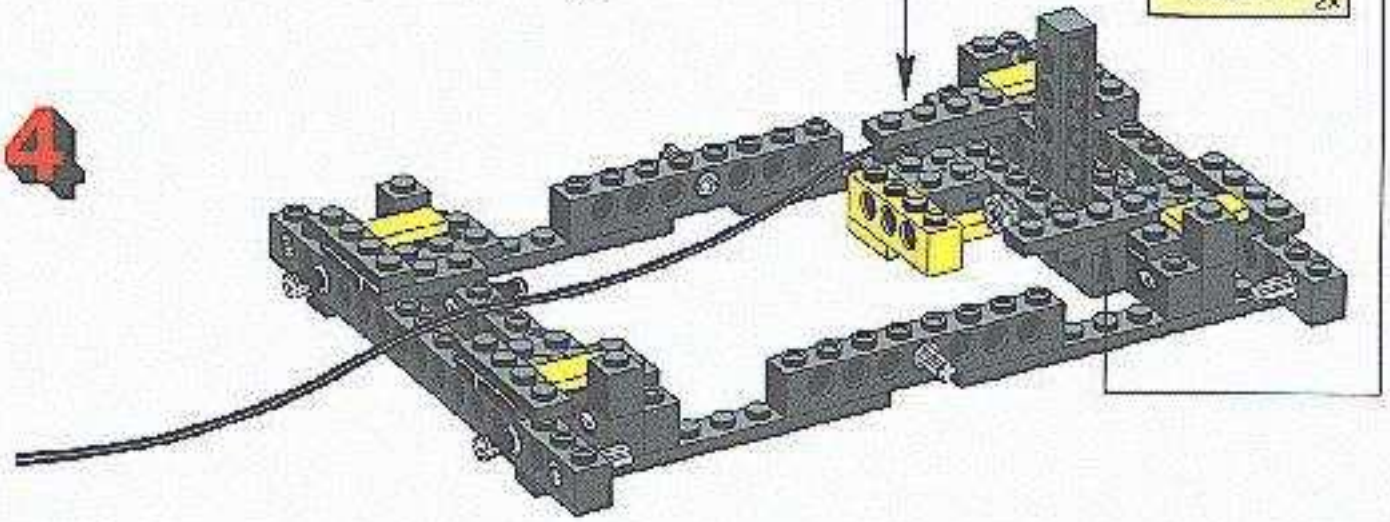

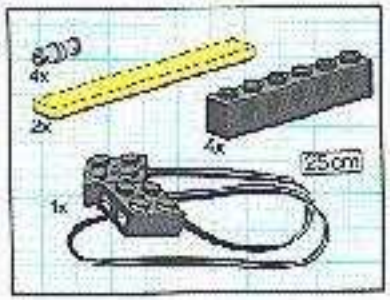

5

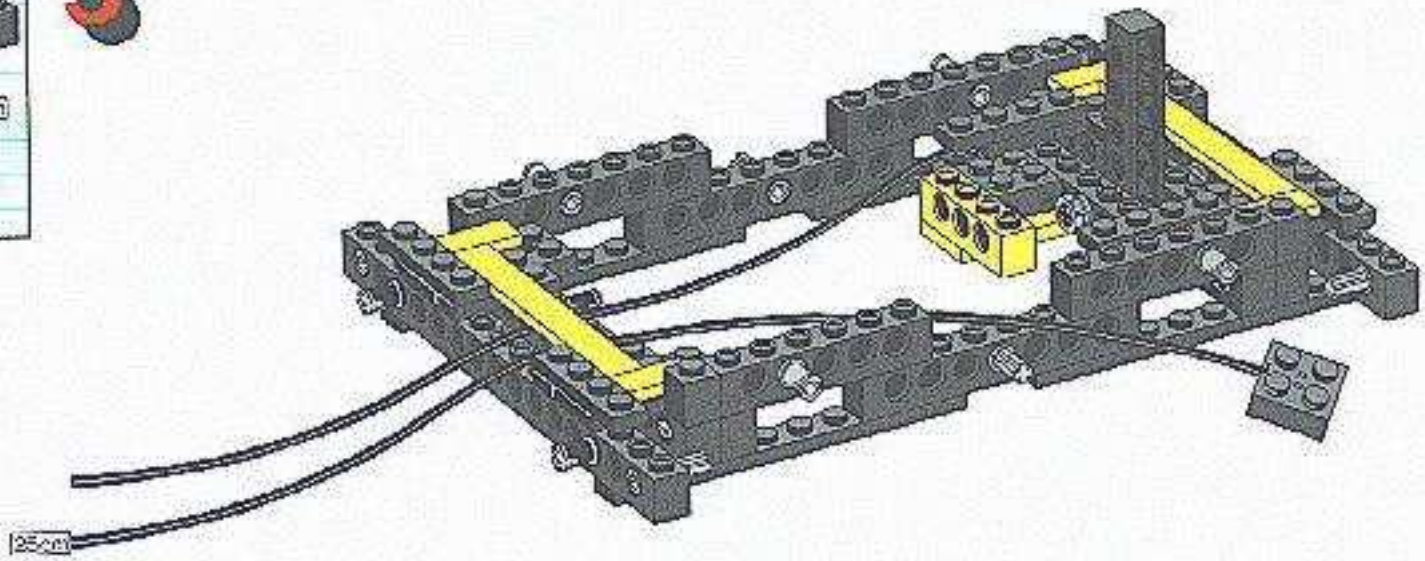

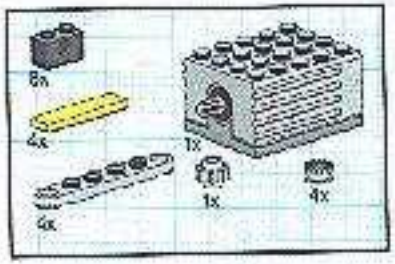

6

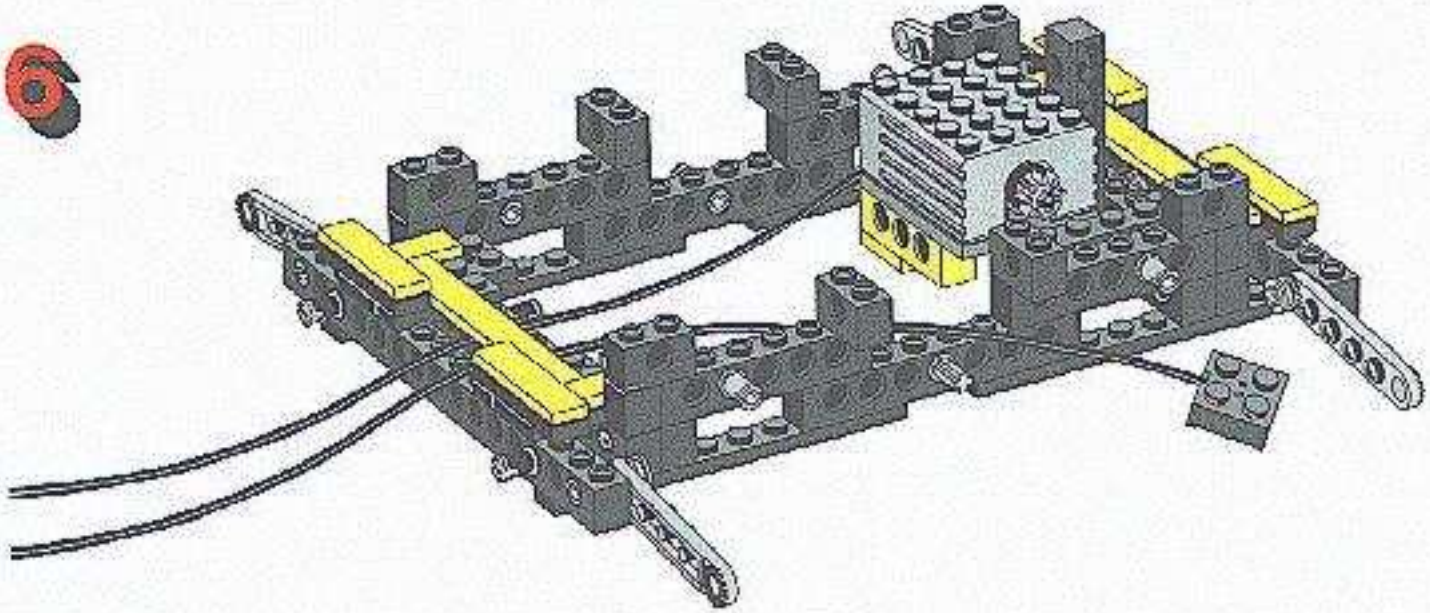

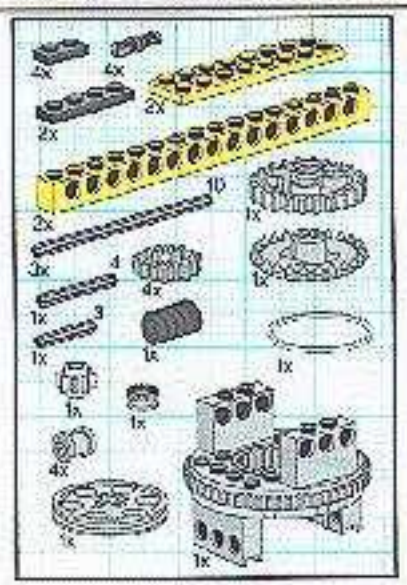

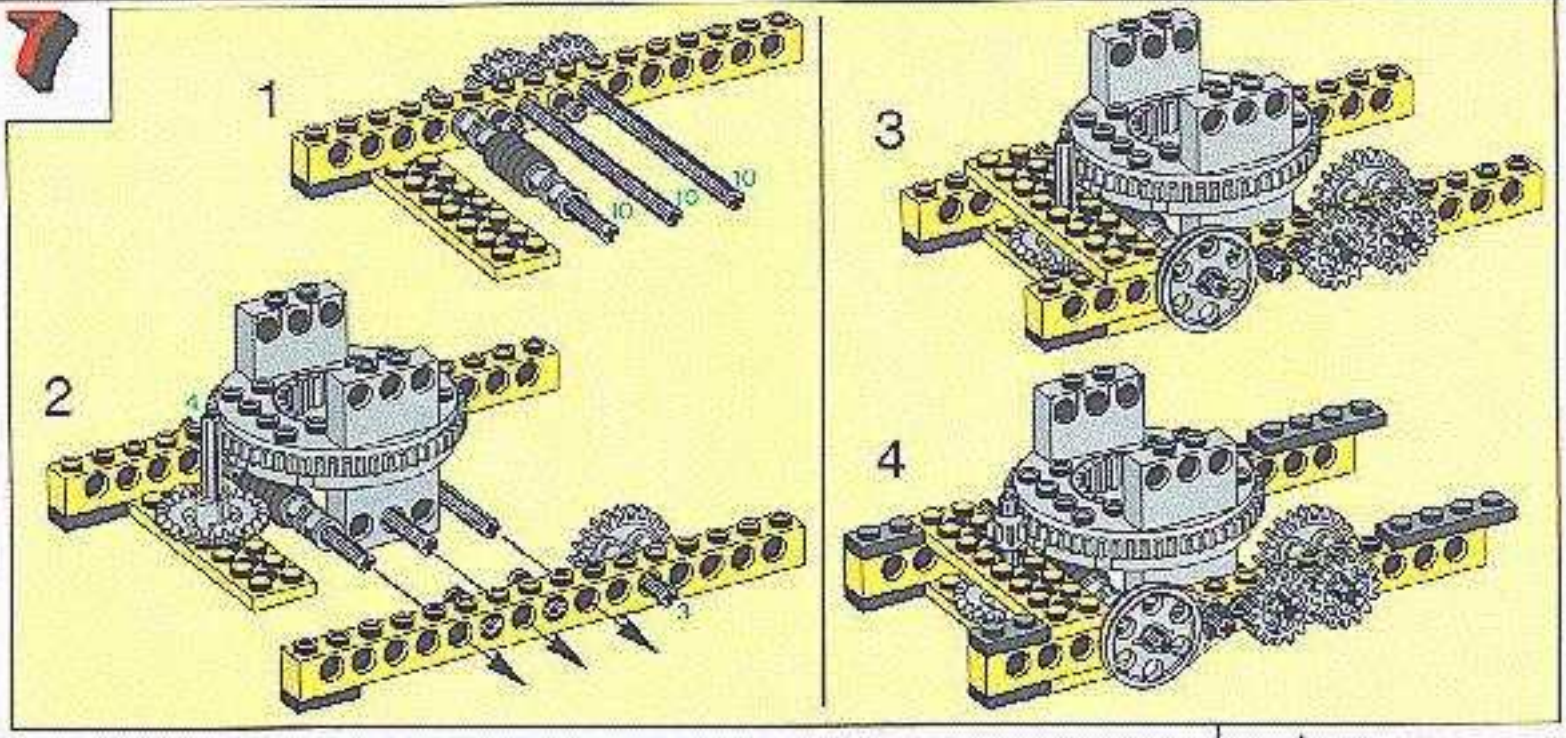
7
1
2
3
4

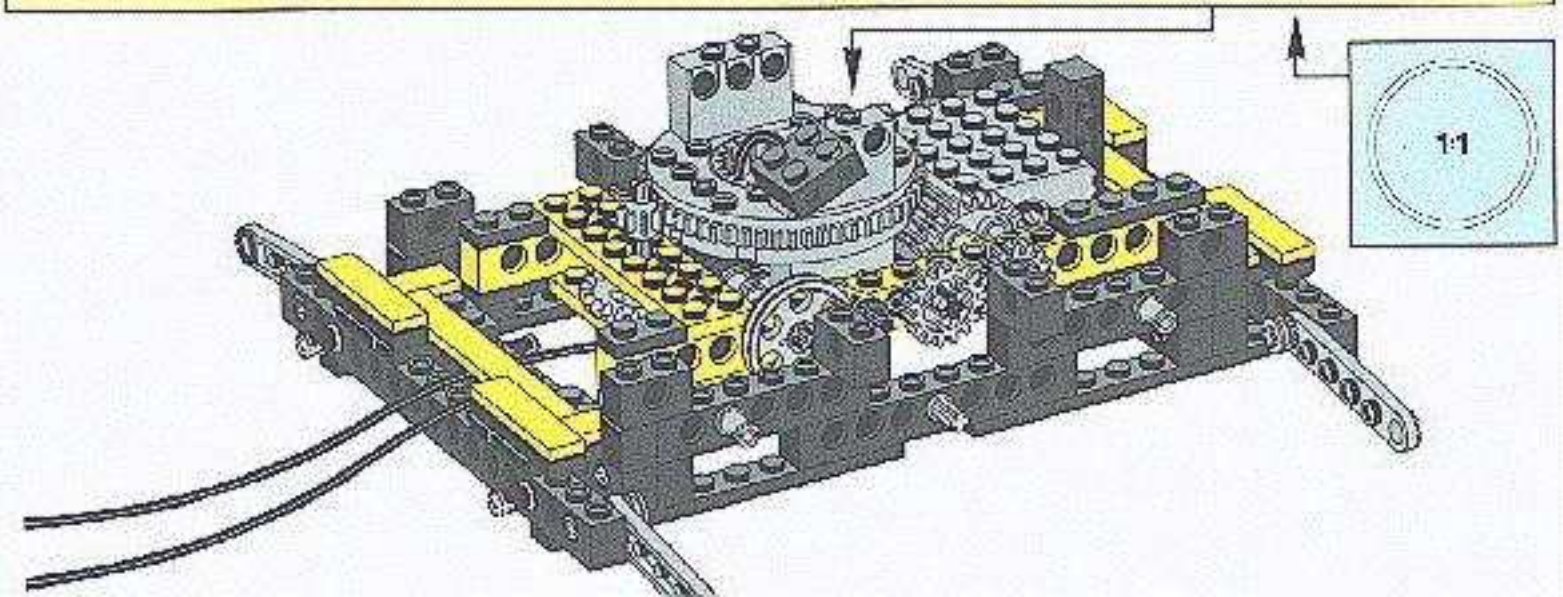
1:1

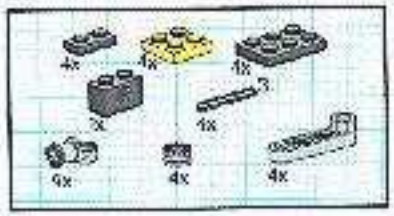

8

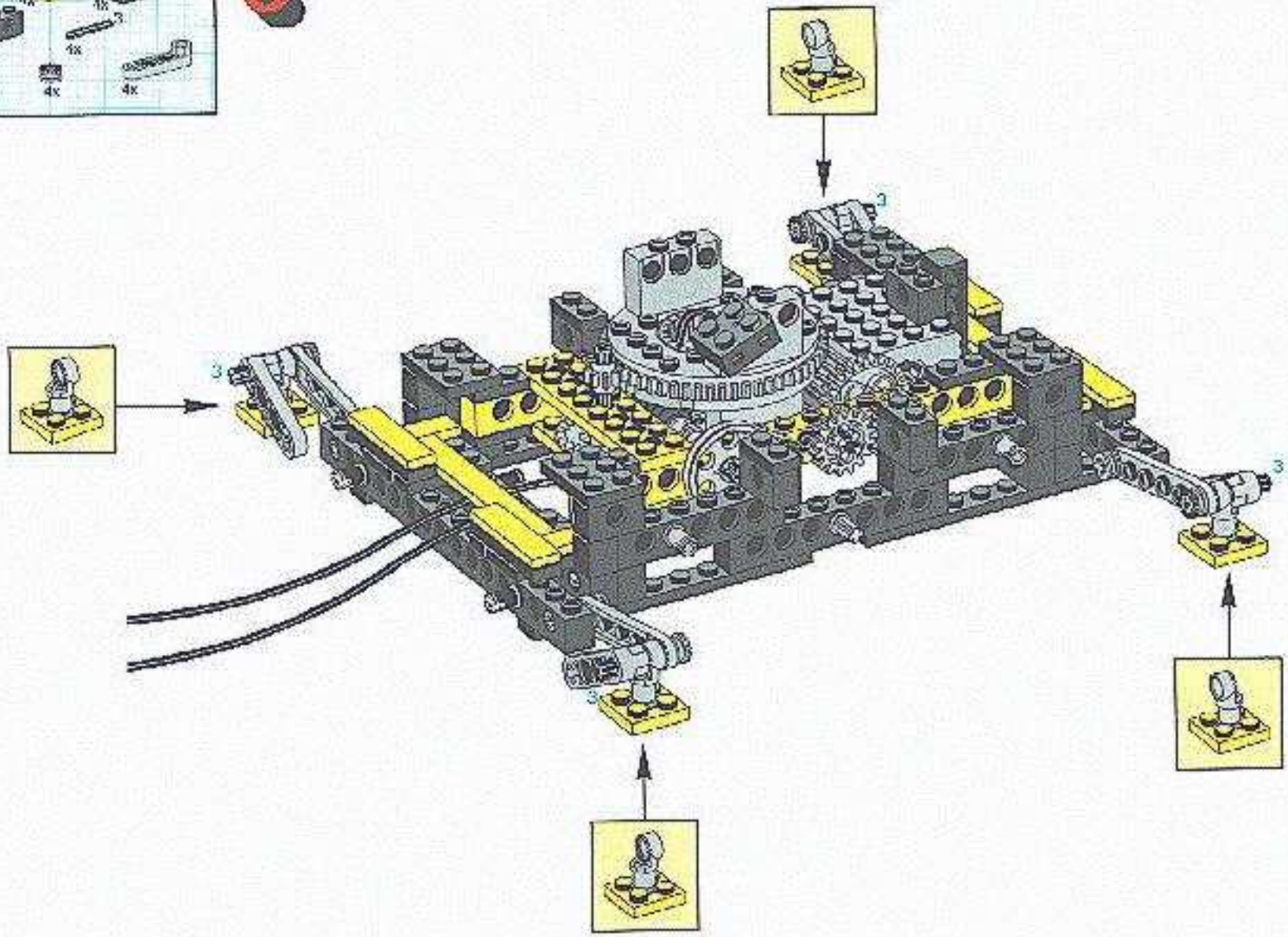

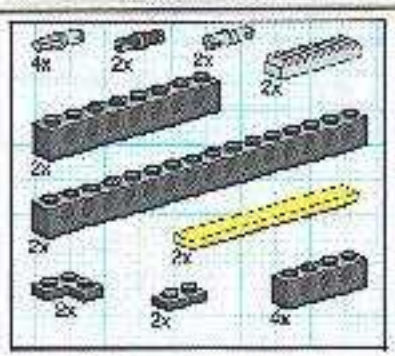

9

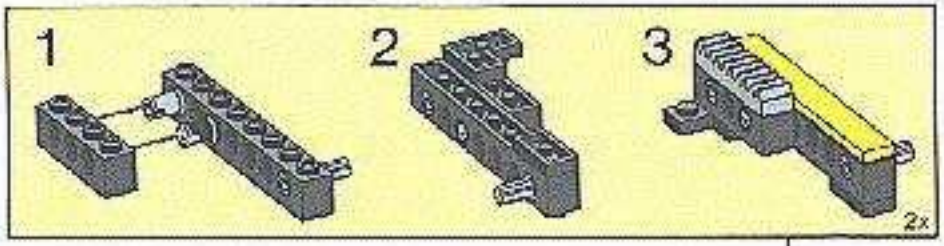

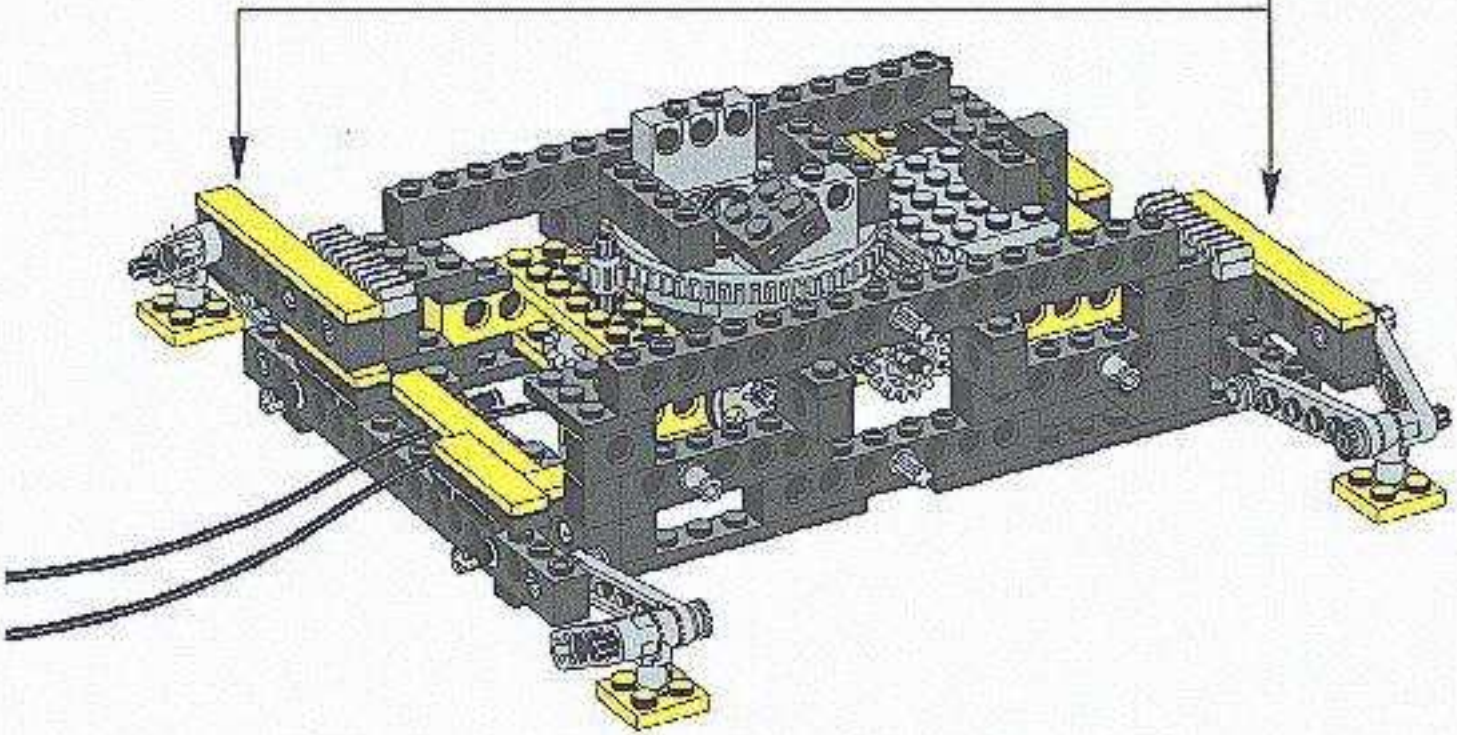

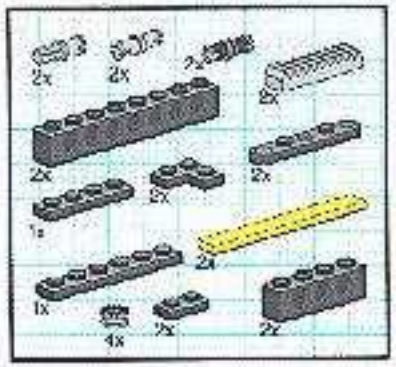

10

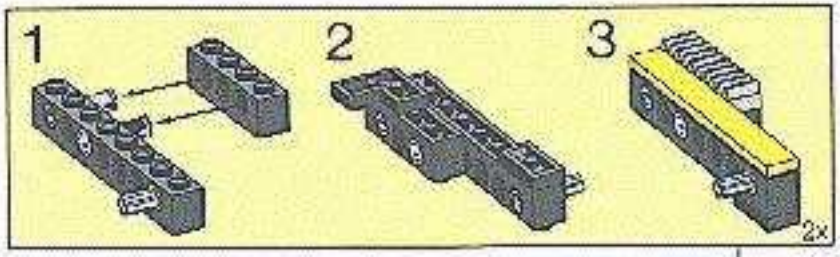

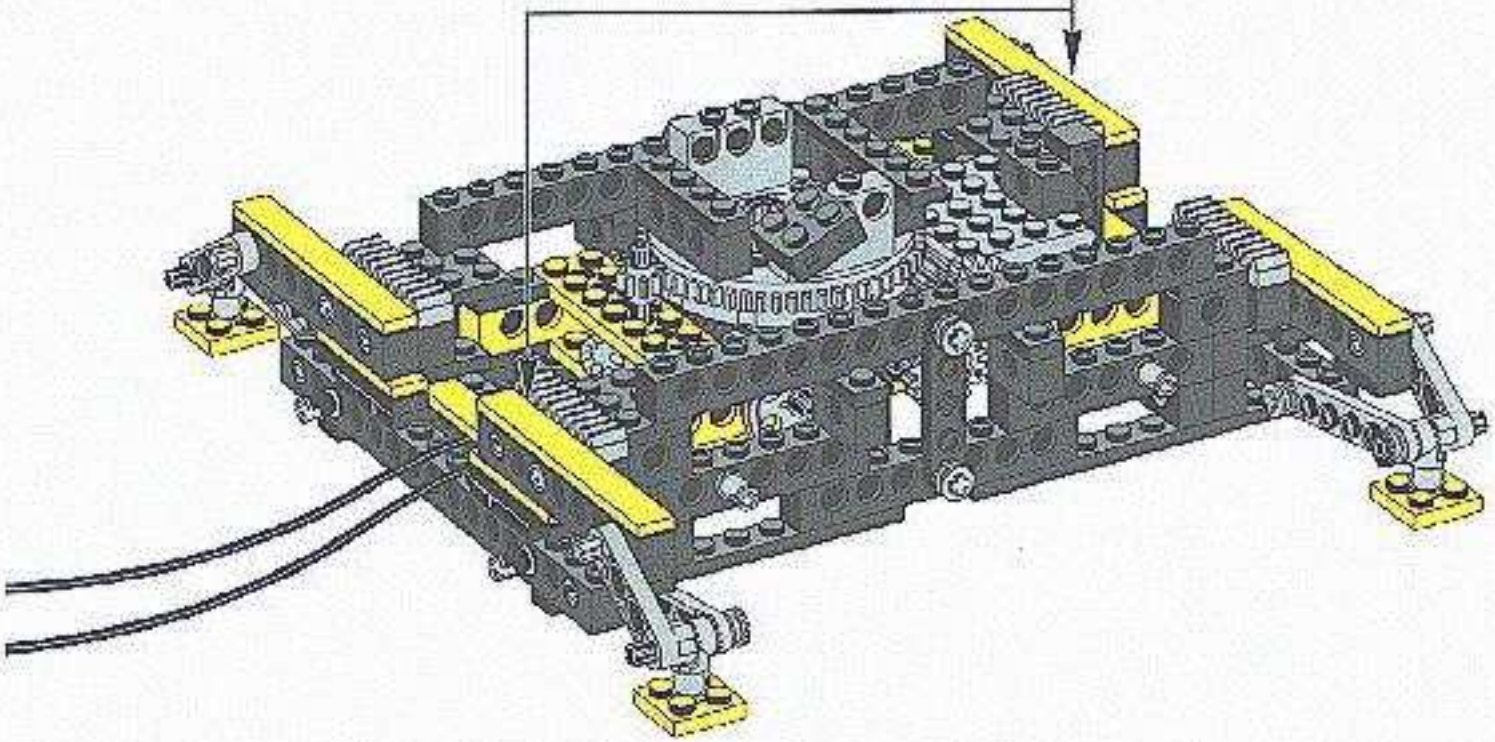

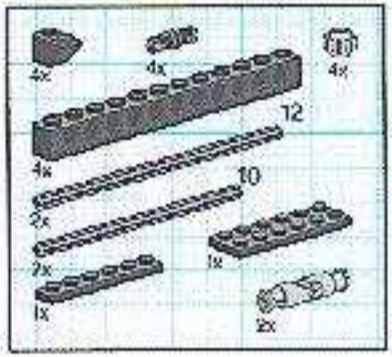
4x
4x
4x
12
4x
10
2x
2x
1x
1x
2x

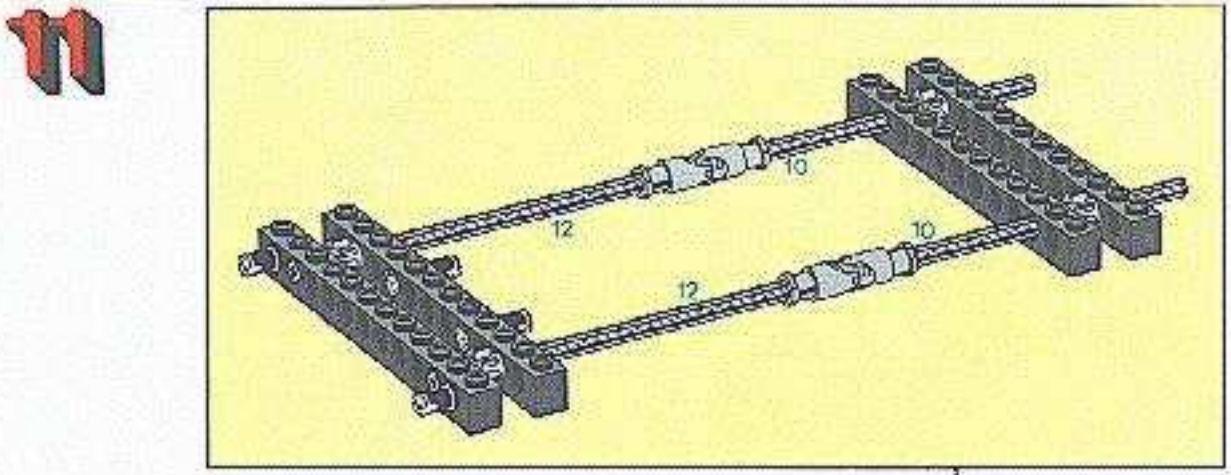
10
12
10
12

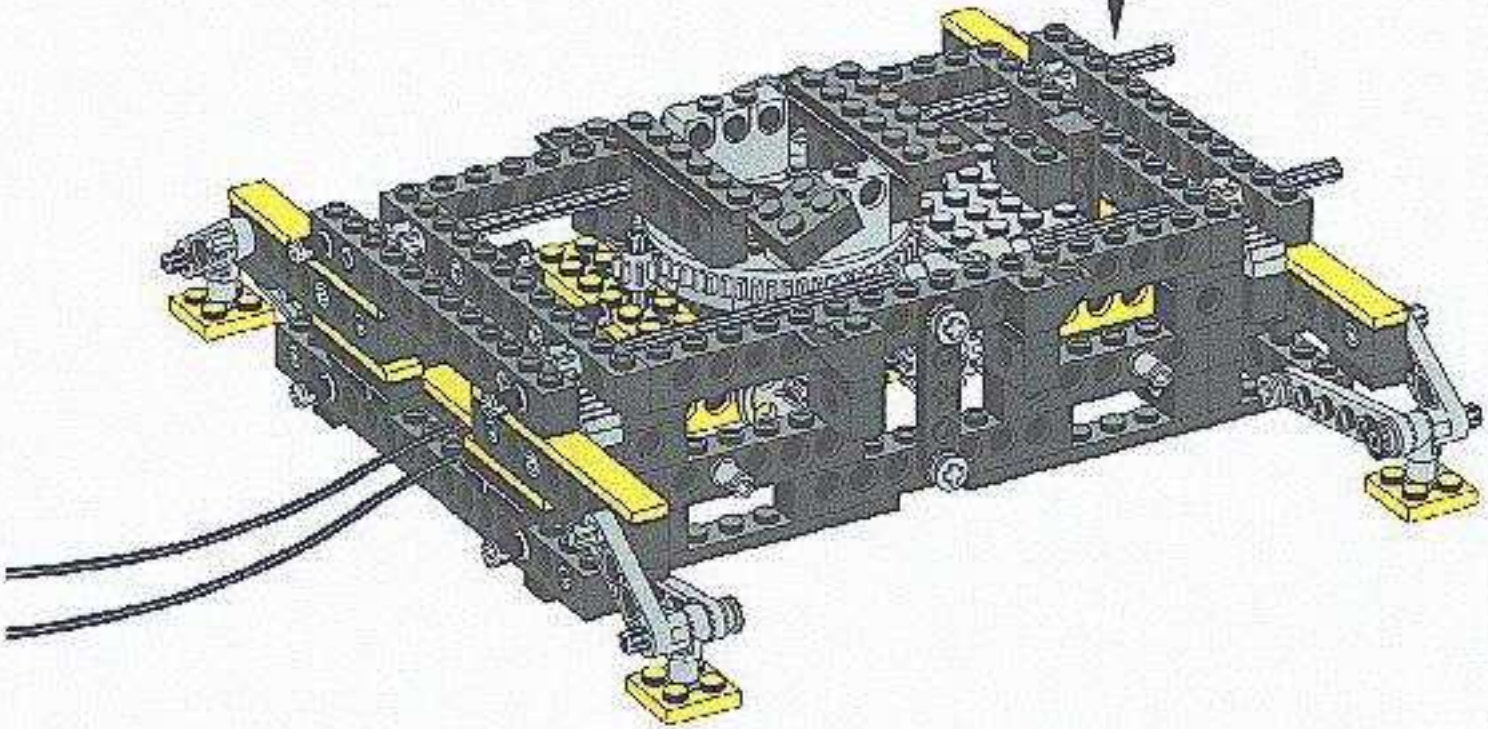

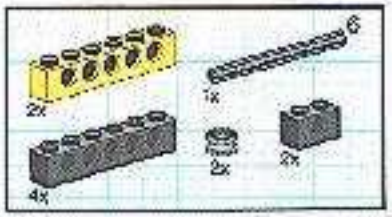

12

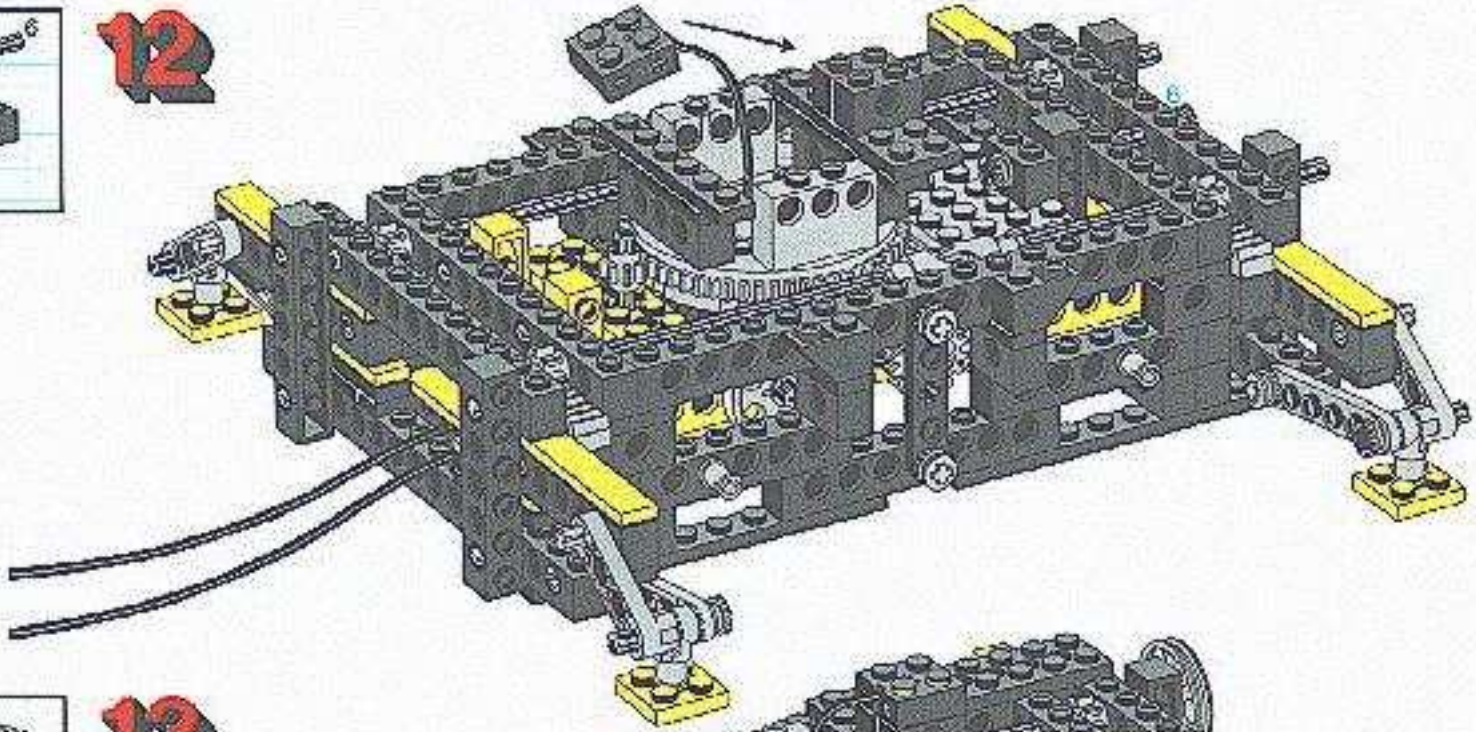

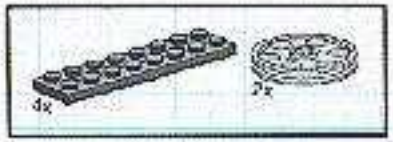

13

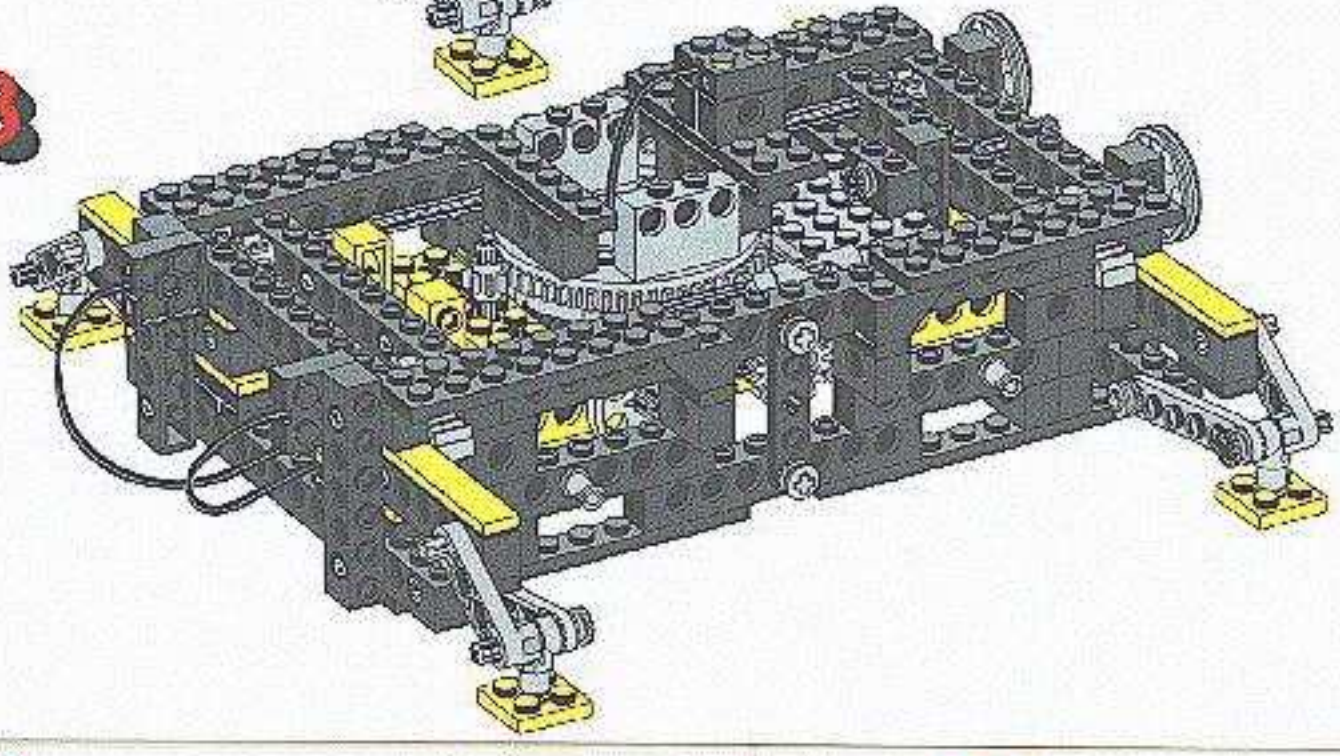

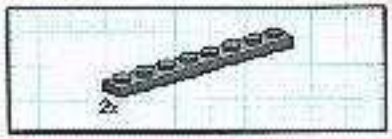

14

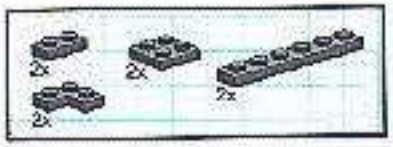

15

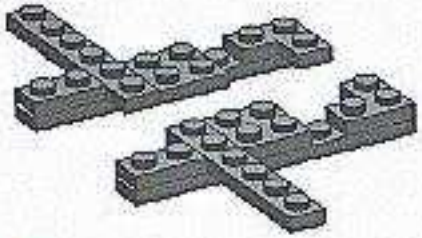

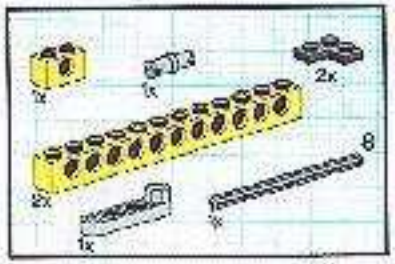

16

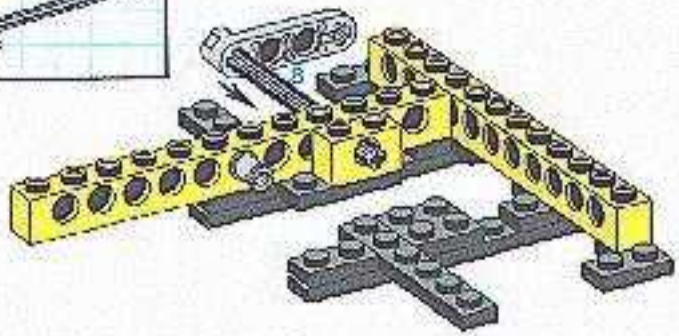

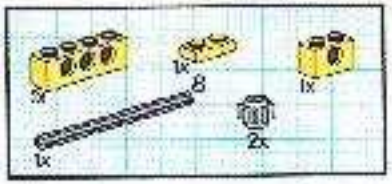

17

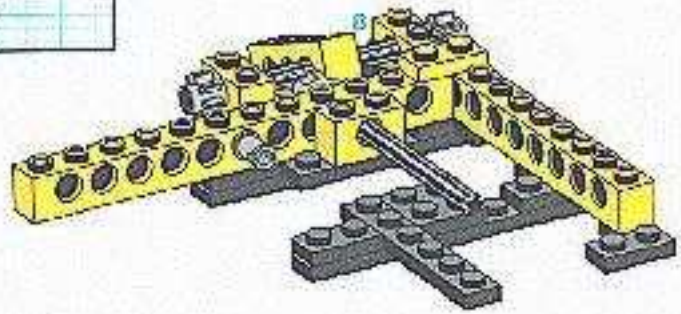

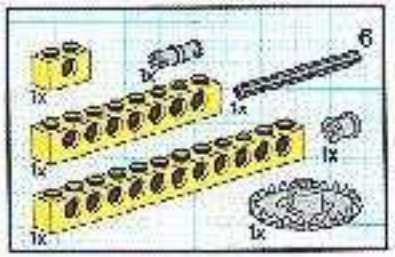

18

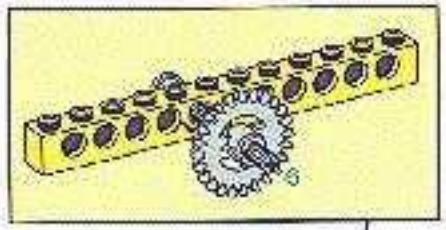

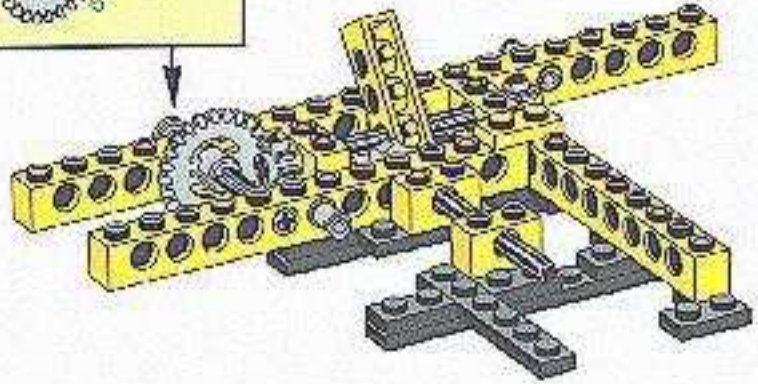

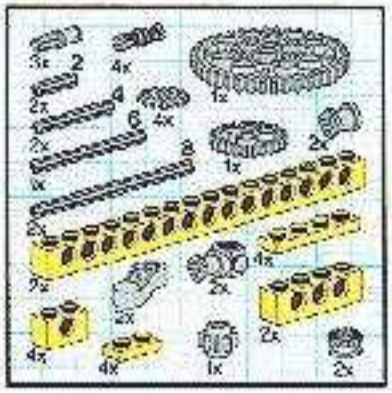

19

1

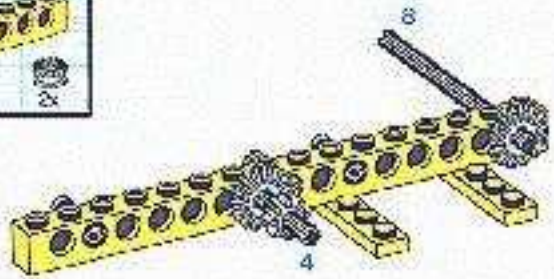

2

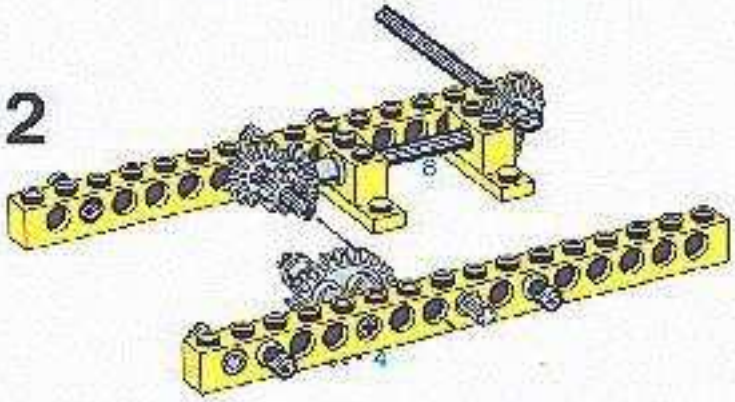

3

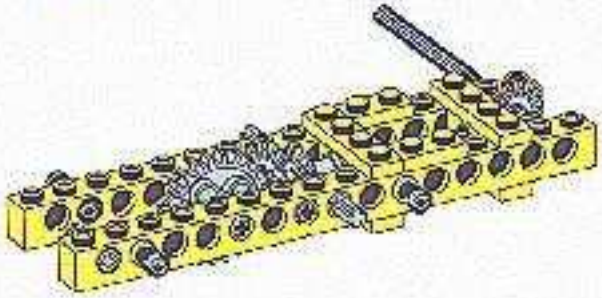

4

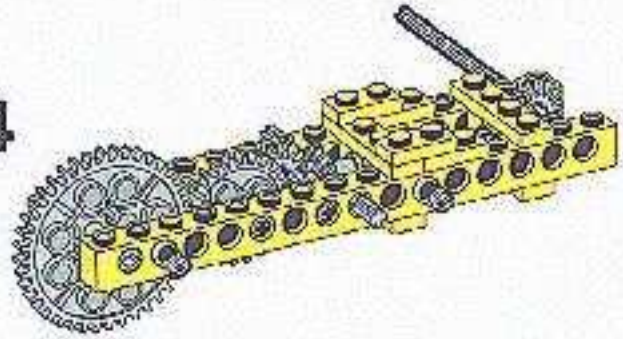

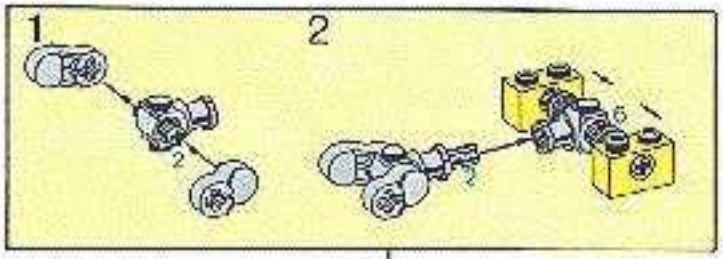

5

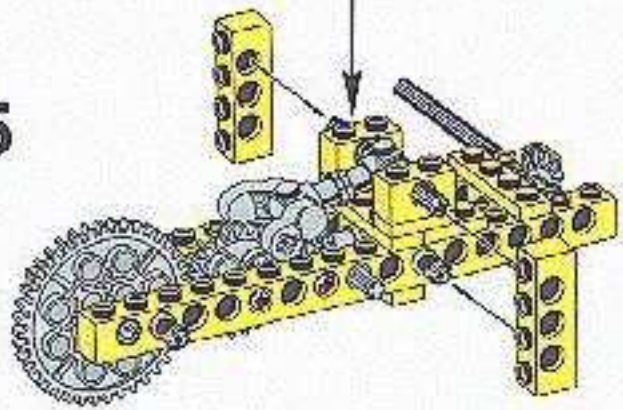

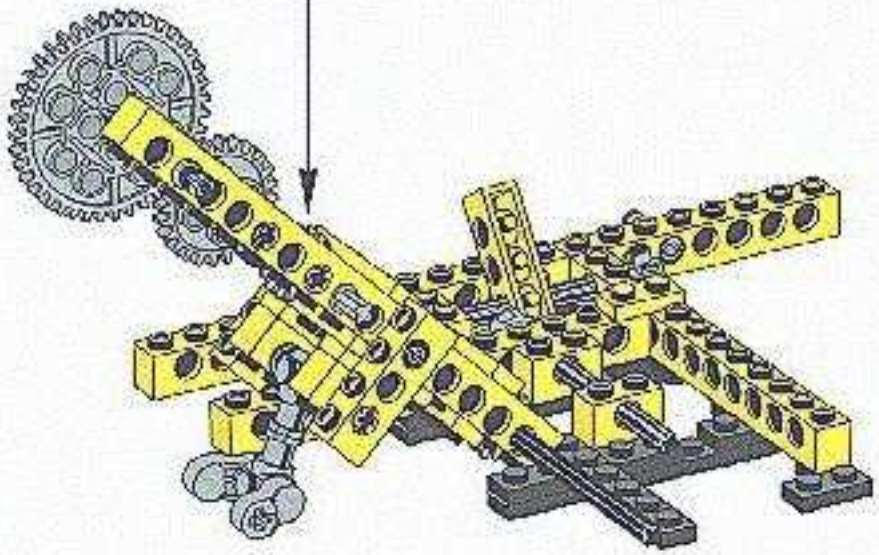

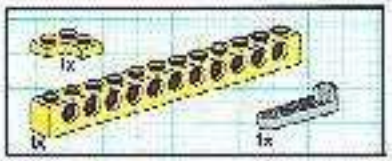

20

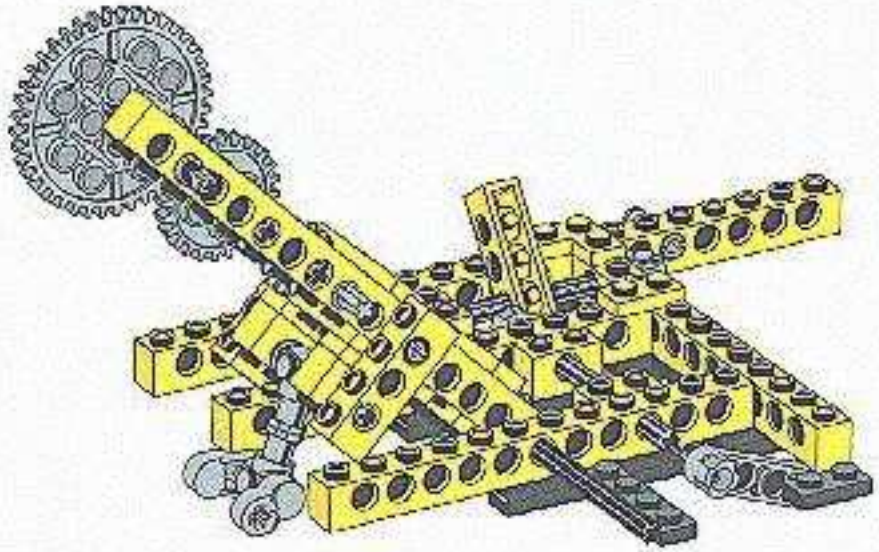

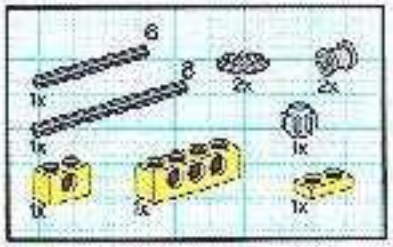

21

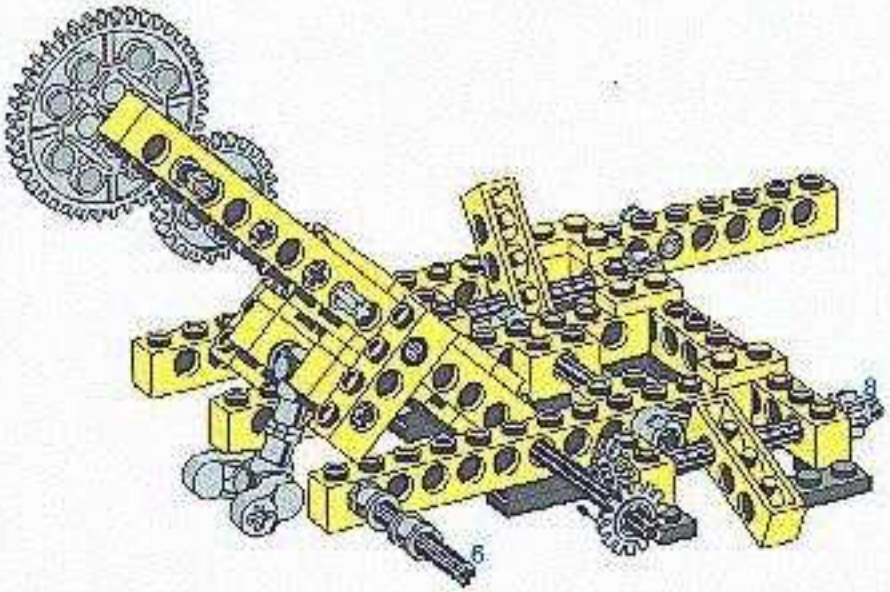

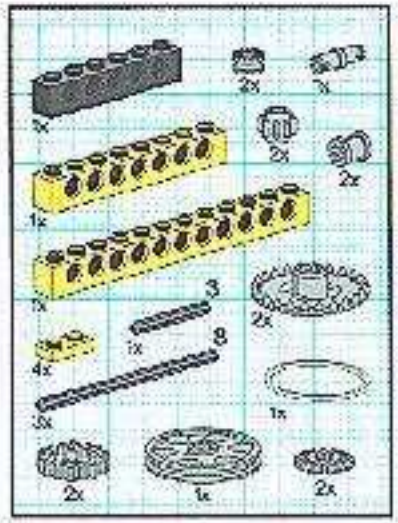

22

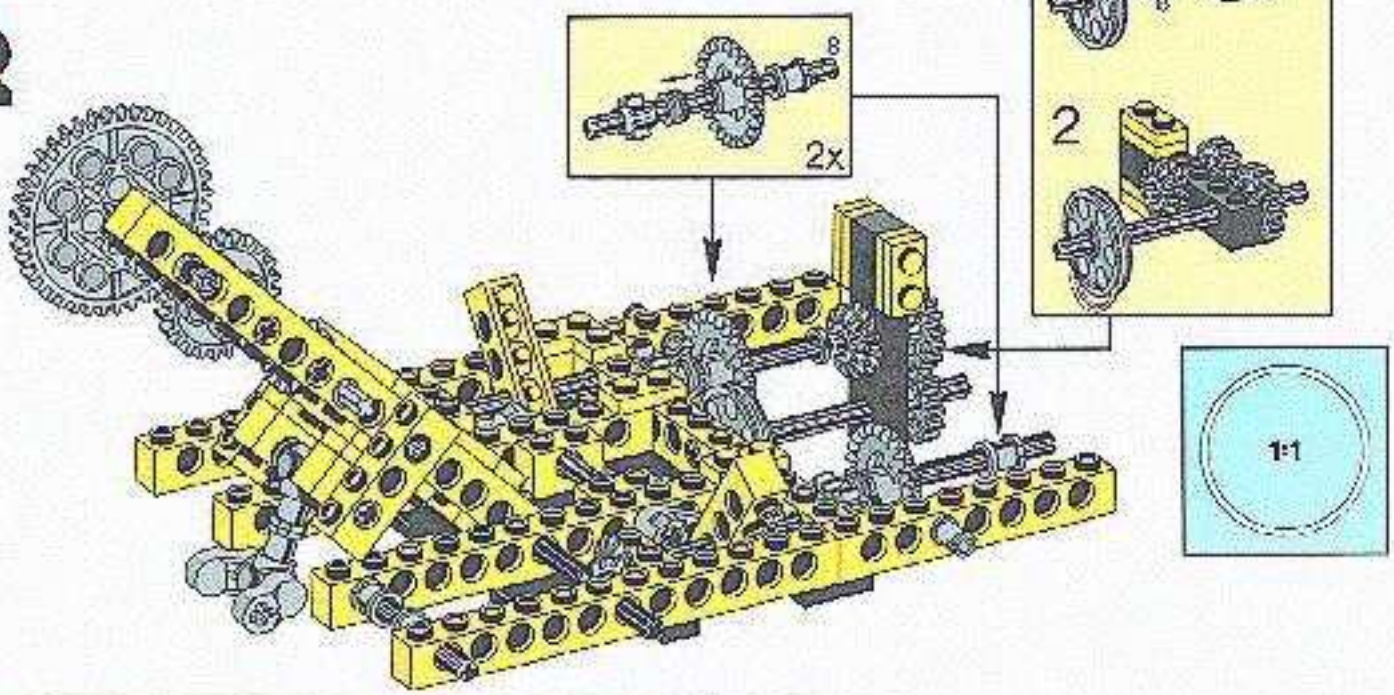

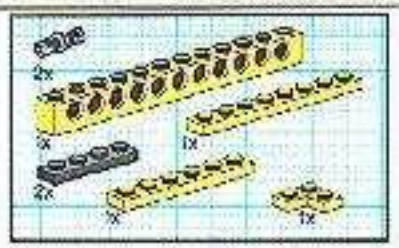

23

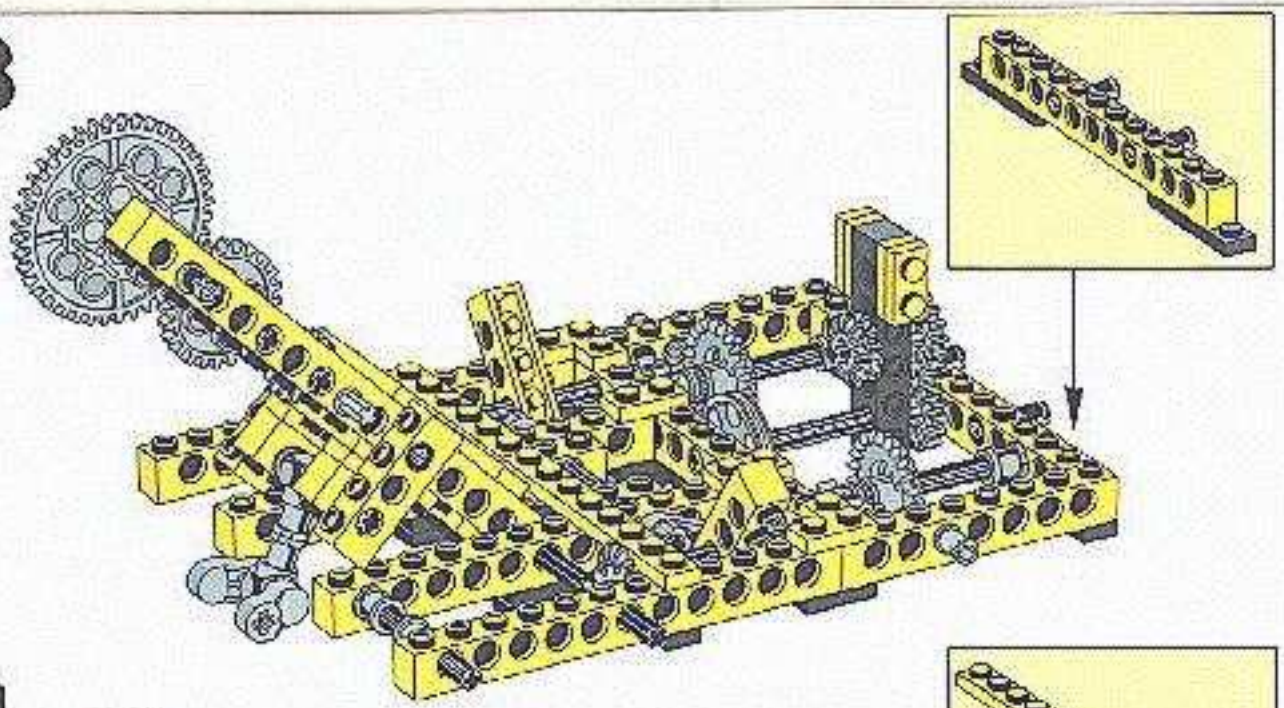

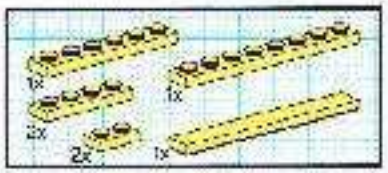

24

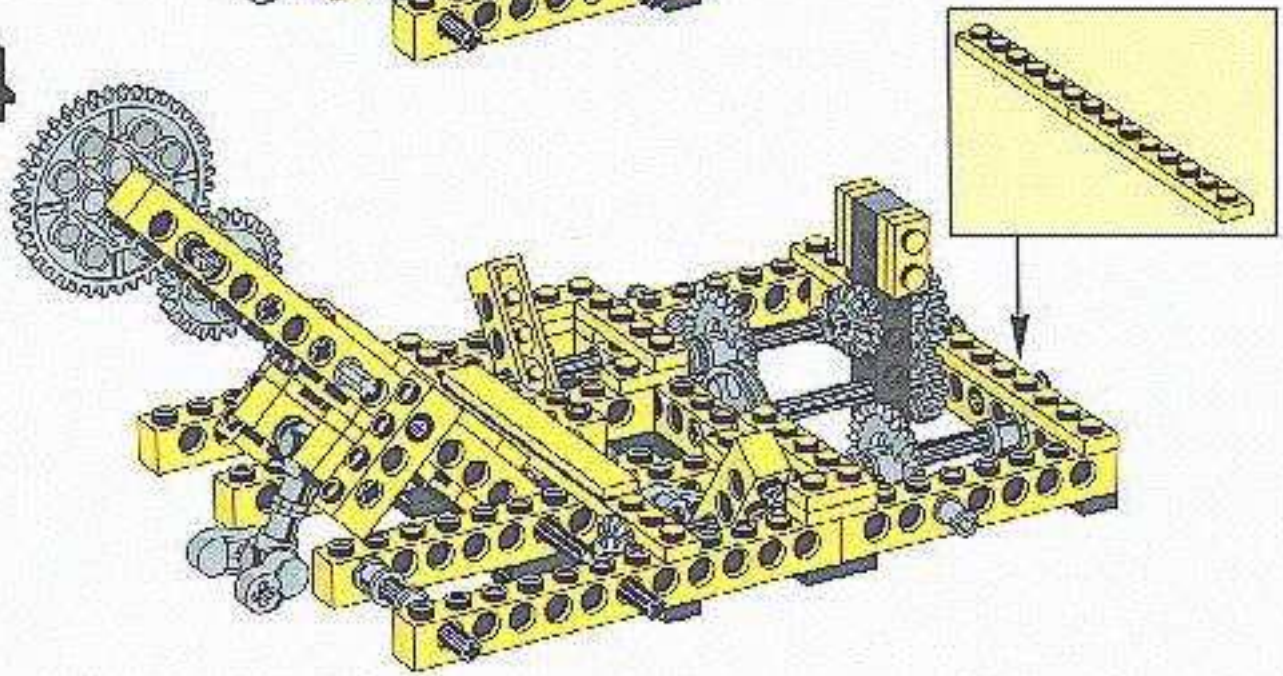

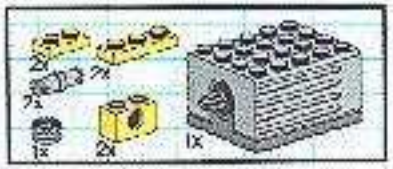

25

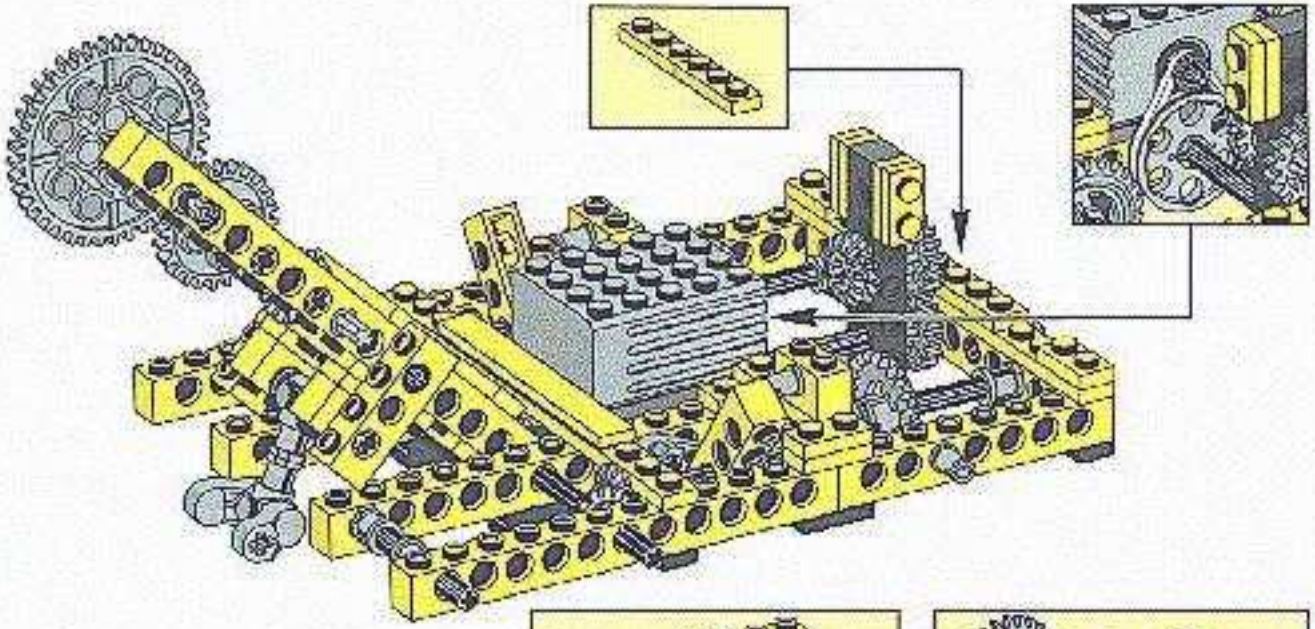

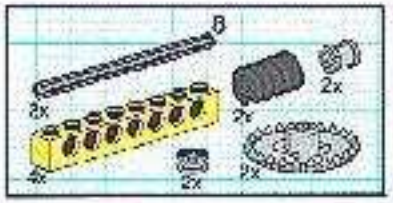

26

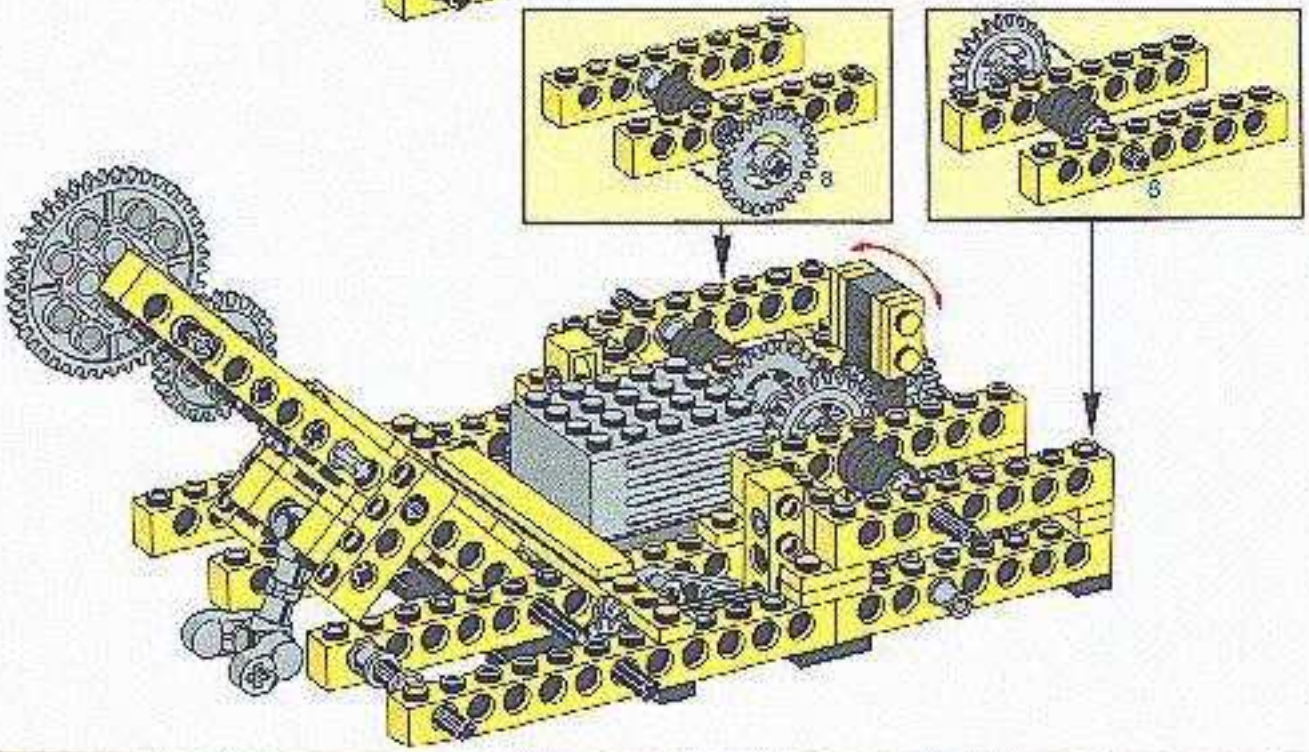

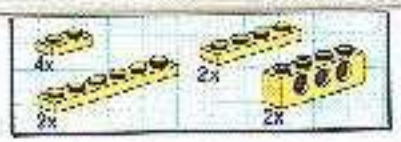

27

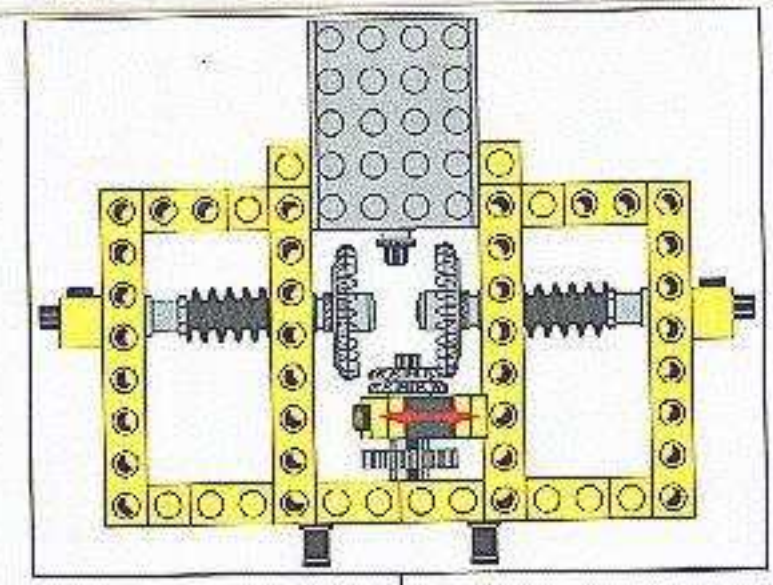

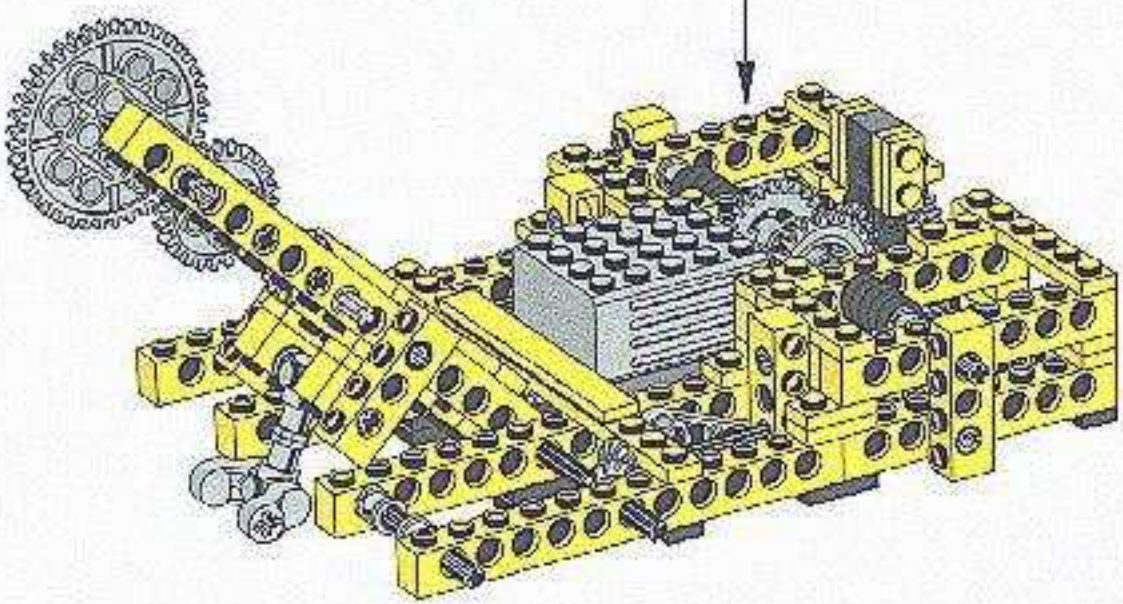

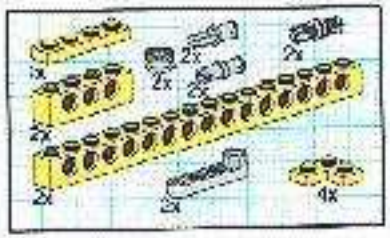

28

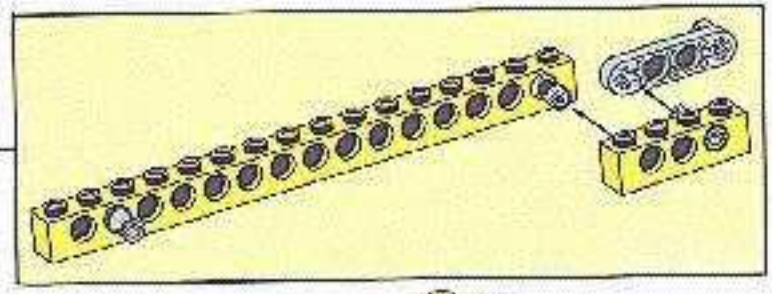

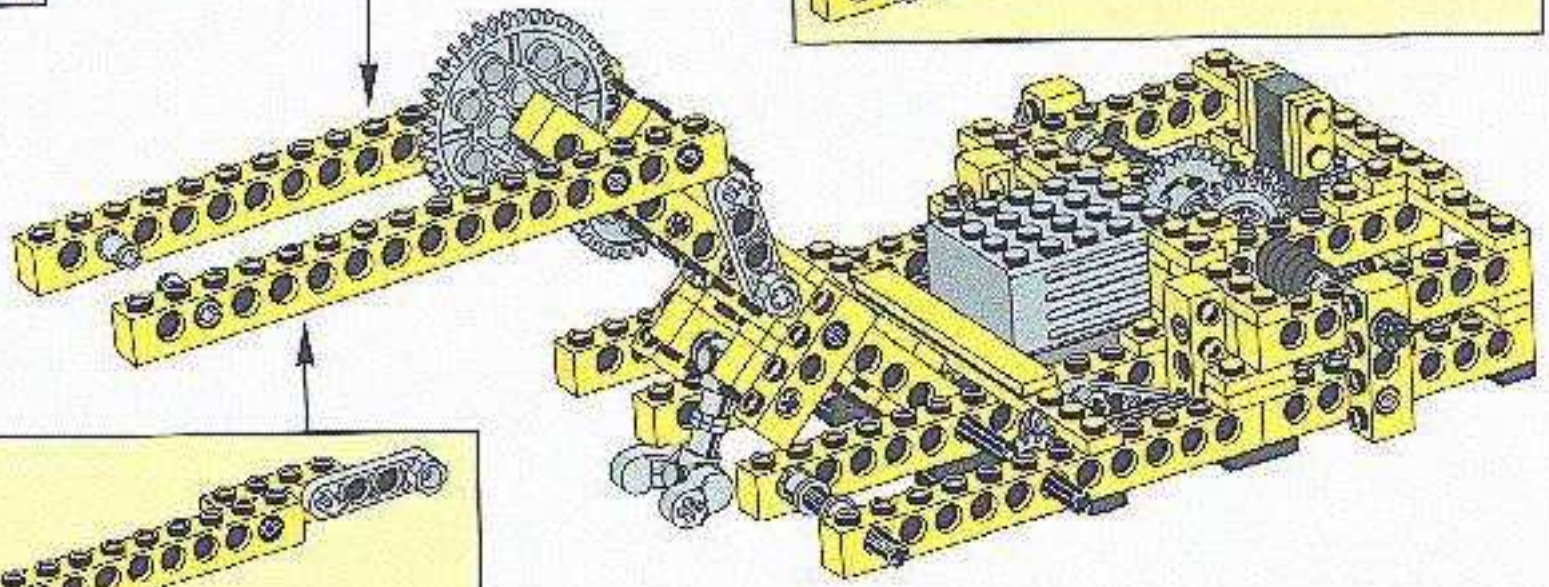

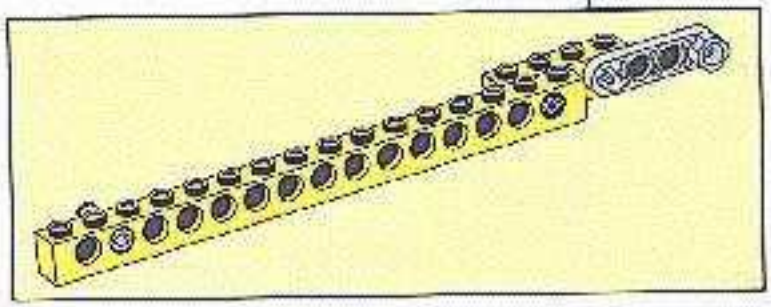

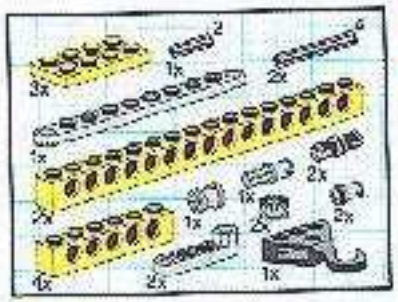

29

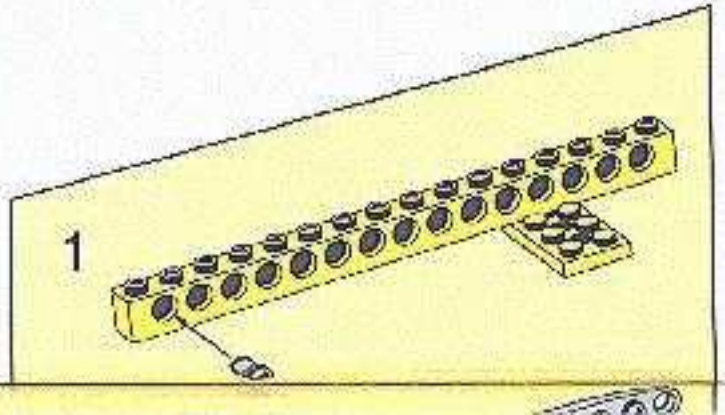

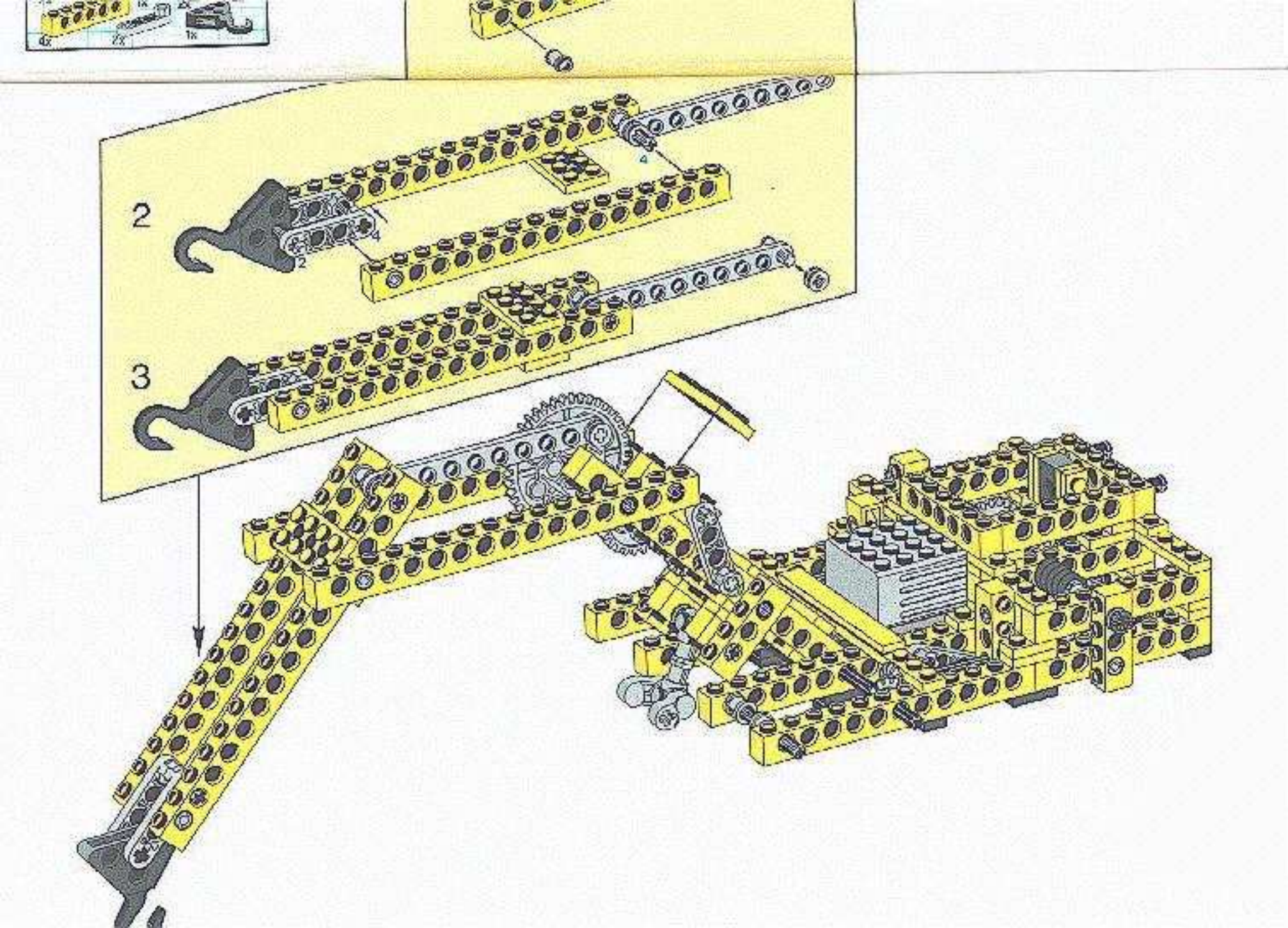
2
3

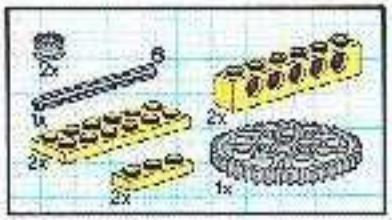

30

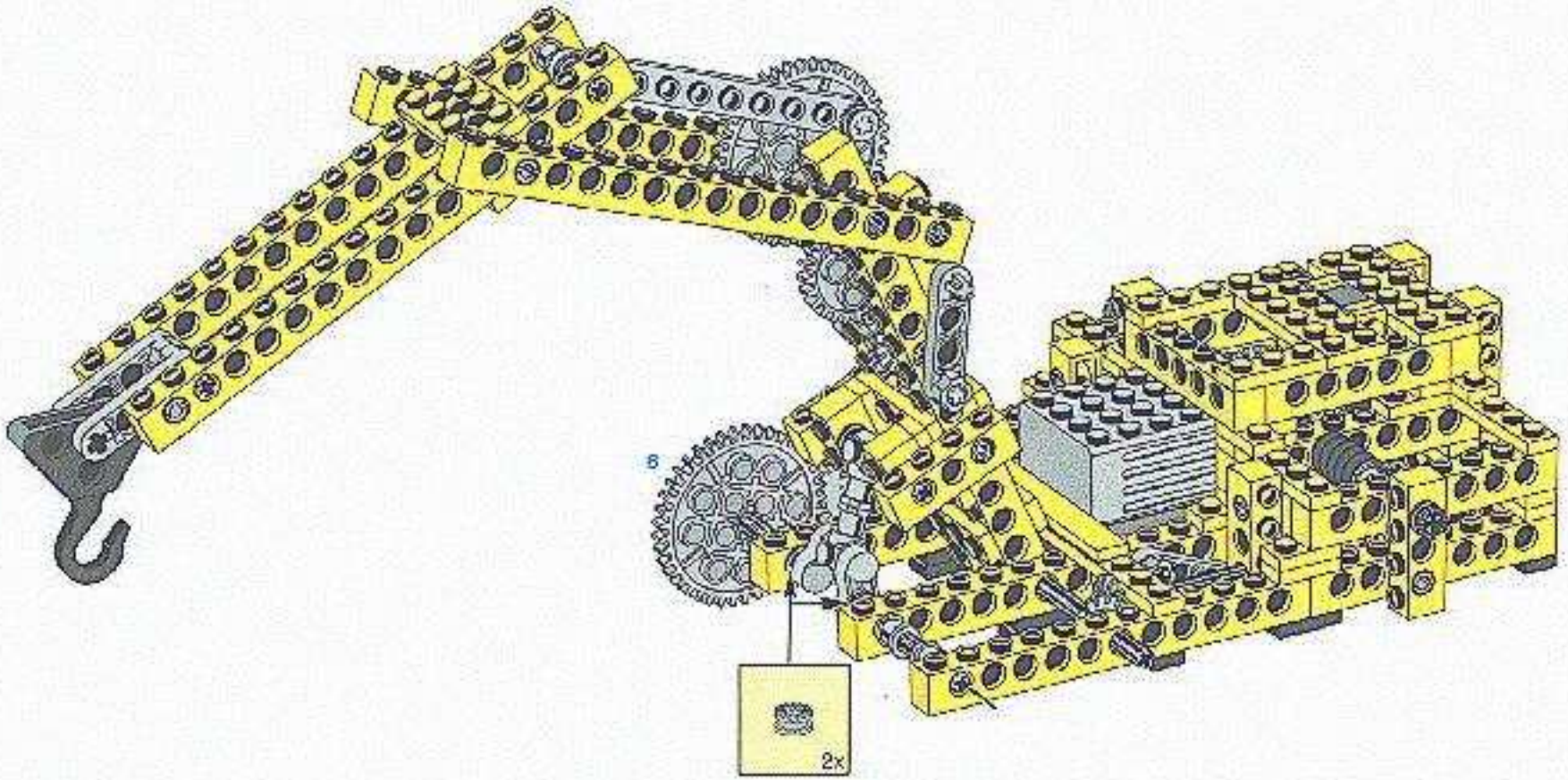

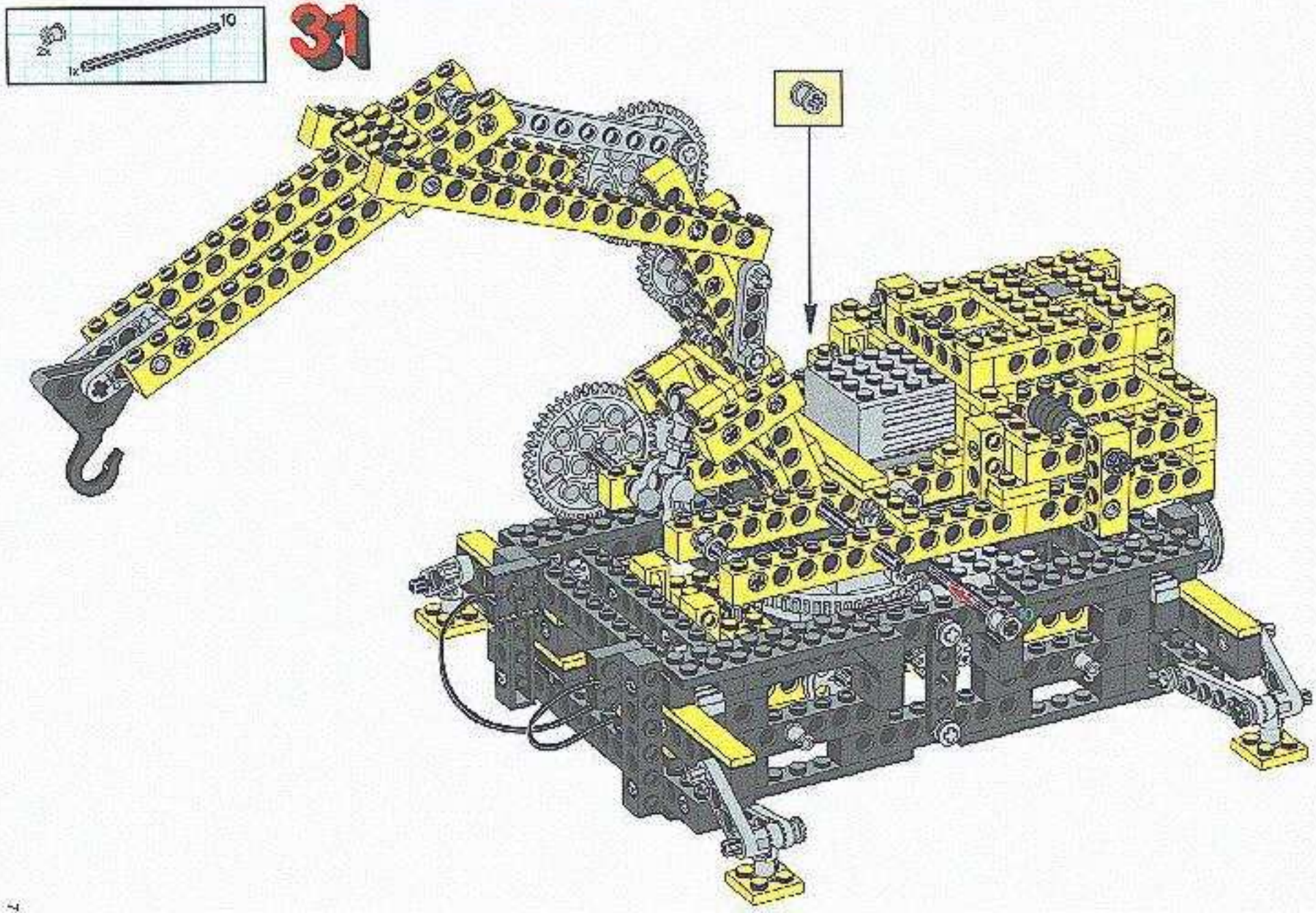
2x
1x
10
31

32

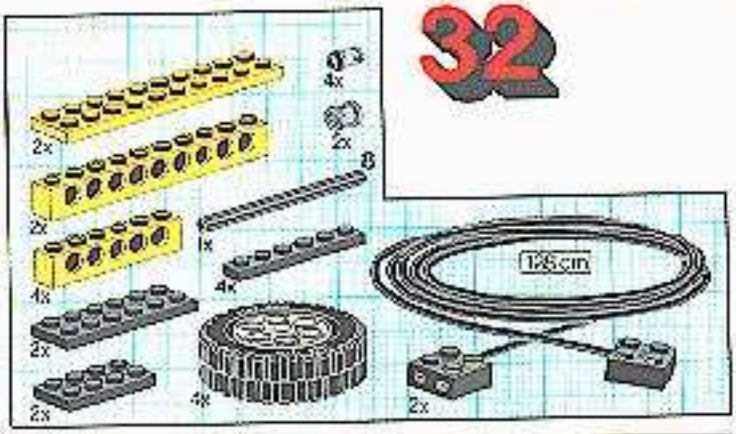

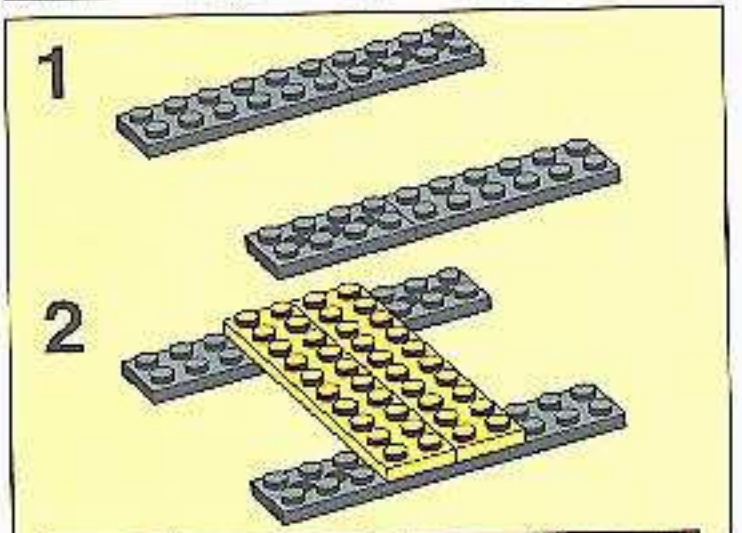

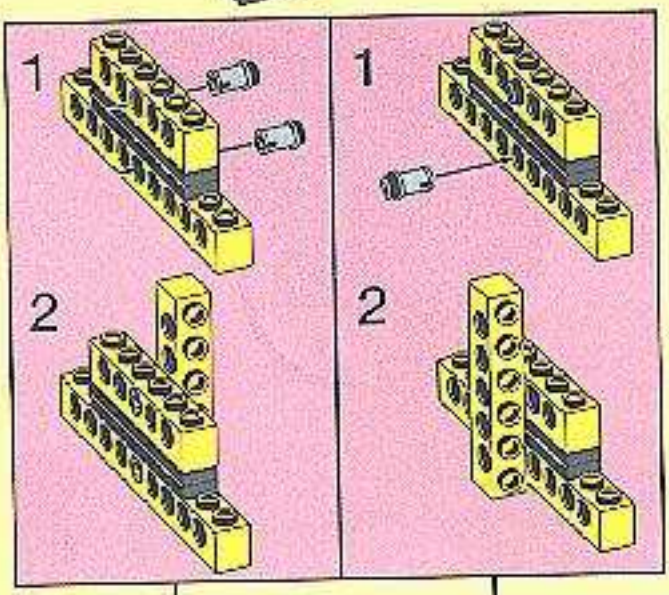

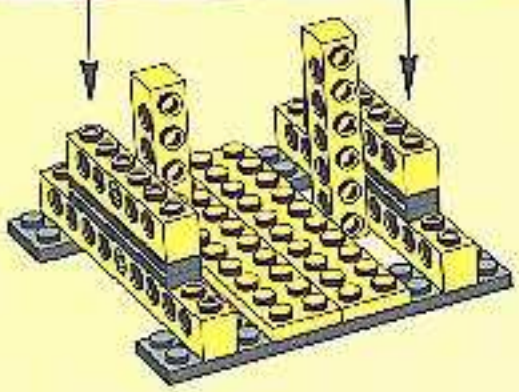

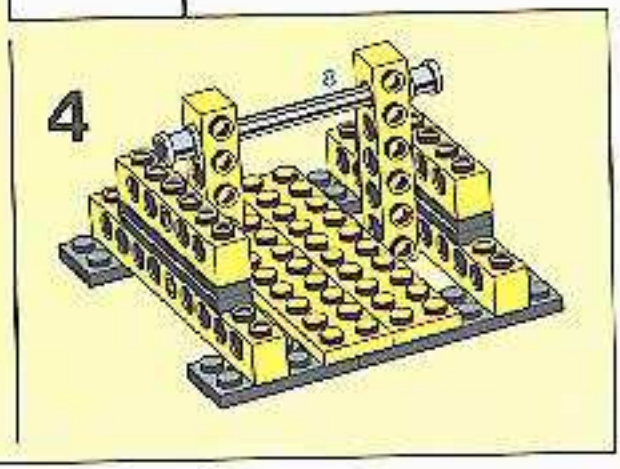

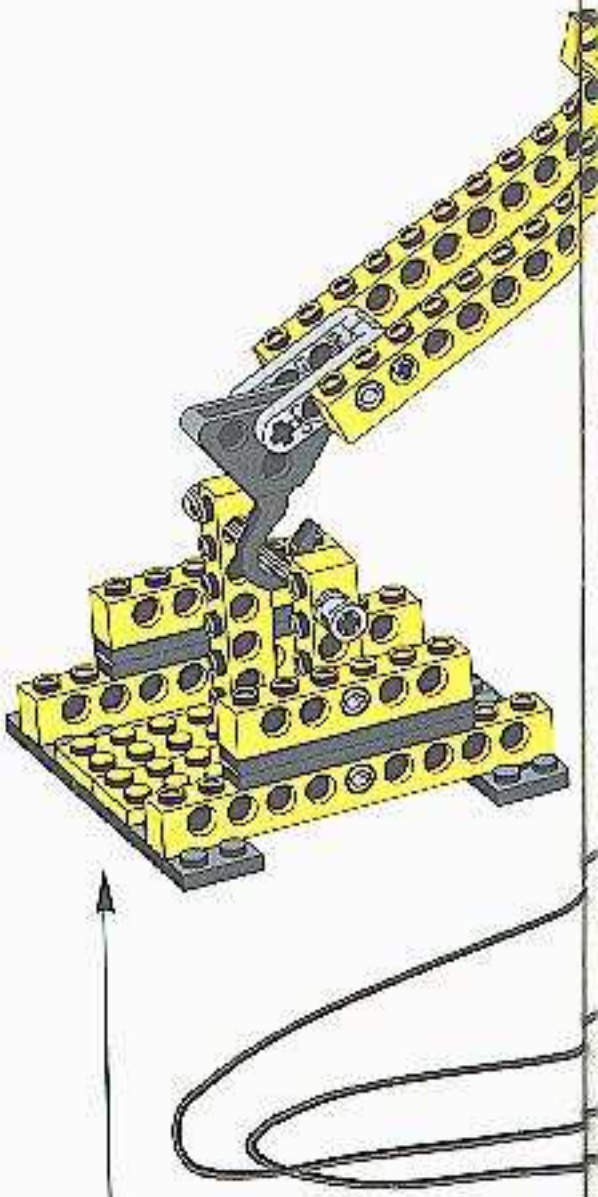

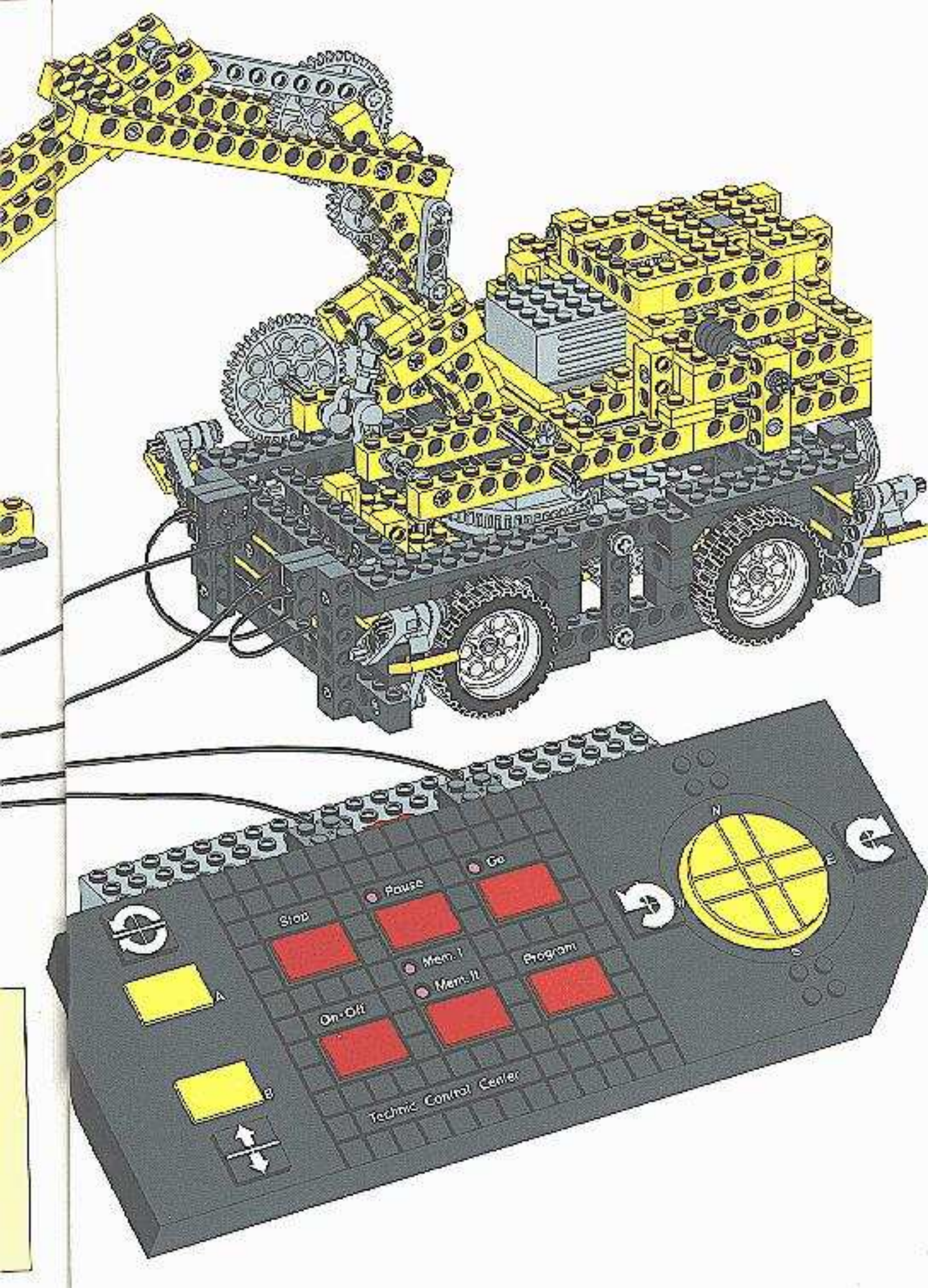
Stop
Pause
Go
Mem. I
Mem. II
Program
On-Off
A
B
N
E
S
Technic Control Center

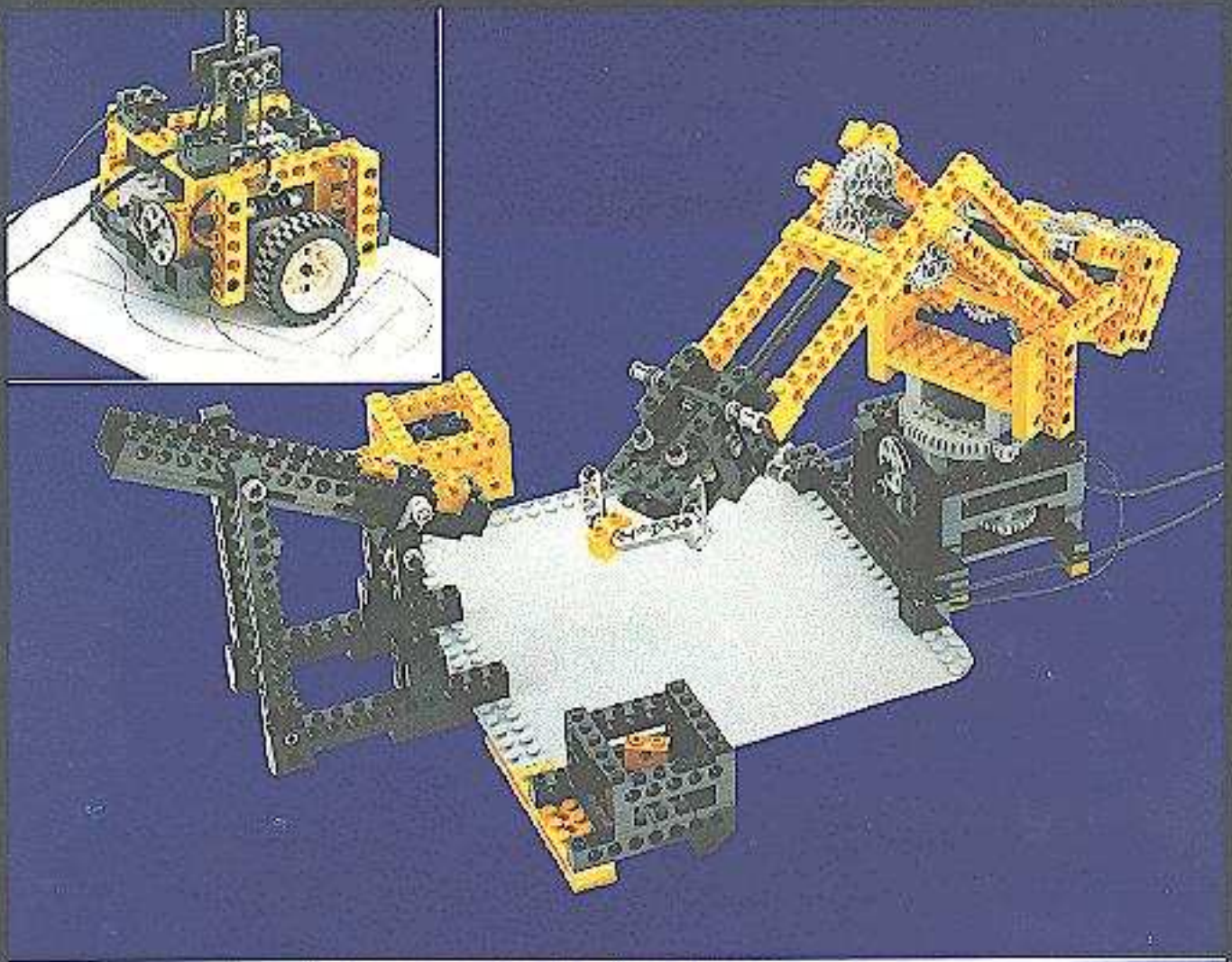

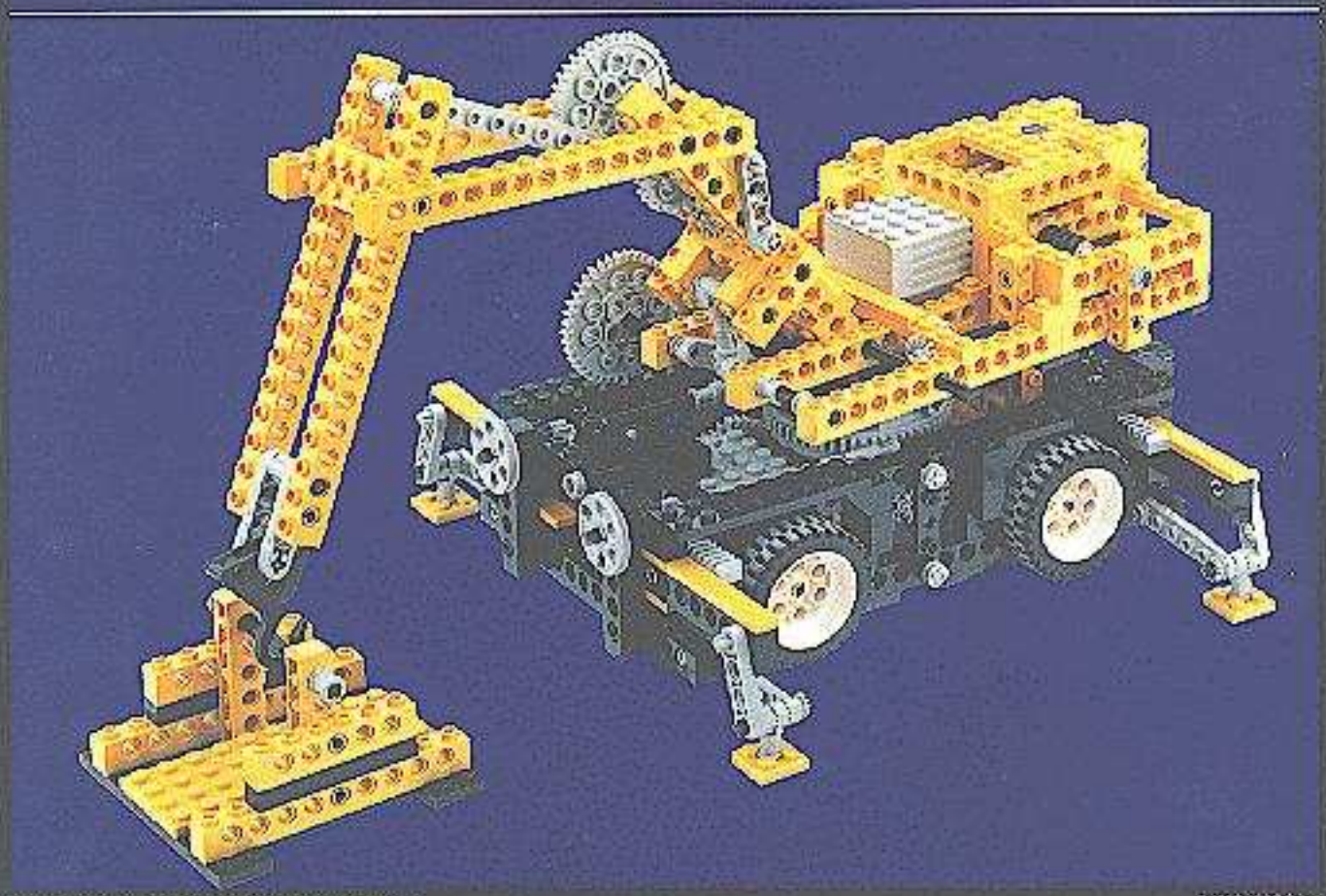

Printed in Switzerland by Colour Printing Weber Ltd., Berne

© 1990 LEGO Group